**This electronic collection of documents is provided for the convenience of the user and is Not a Certified Document –**

**The documents contained herein were originally issued and sealed by the individuals whose names and license numbers appear on each page, on the dates appearing with their signature on that page.**
**This file or an individual page shall not be considered a certified document.**

DocuSign Envelope ID: FDC55FDA-ED29-449B-A558-5D3CD2BA3515

09/08/99

PROJECT: 51214.01AM

CONTRACT: DN00770

See Sheet 1A For Index of Sheets

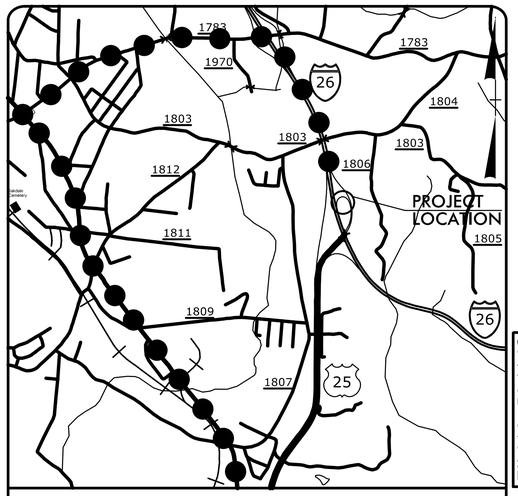


VICINITY MAP
OFFSITE DETOUR

FINAL PLANS

# STATE OF NORTH CAROLINA
# DIVISION OF HIGHWAYS

# *HENDERSON COUNTY*

***LOCATION: I–26 WEST OFF RAMP DRAINAGE REPAIR AT EXIT 54 FOR US 25 SOUTH***

***TYPE OF WORK: GRADING, DRAINAGE, AND PAVING***

| STATE | STATE PROJECT REFERENCE NO. | SHEET NO. | TOTAL SHEETS |
|---|---|---|---|
| N.C. | 51214.01AM | 1 | |

| STATE PROJ. NO. | F.A. PROJ. NO. | DESCRIPTION |
|---|---|---|
| 51214.01AM | N/A | PE |
| 51214.01AM | N/A | R/W & UTIL. |
| 51214.01AM | N/A | CONST. |

NAD 83/2011

4

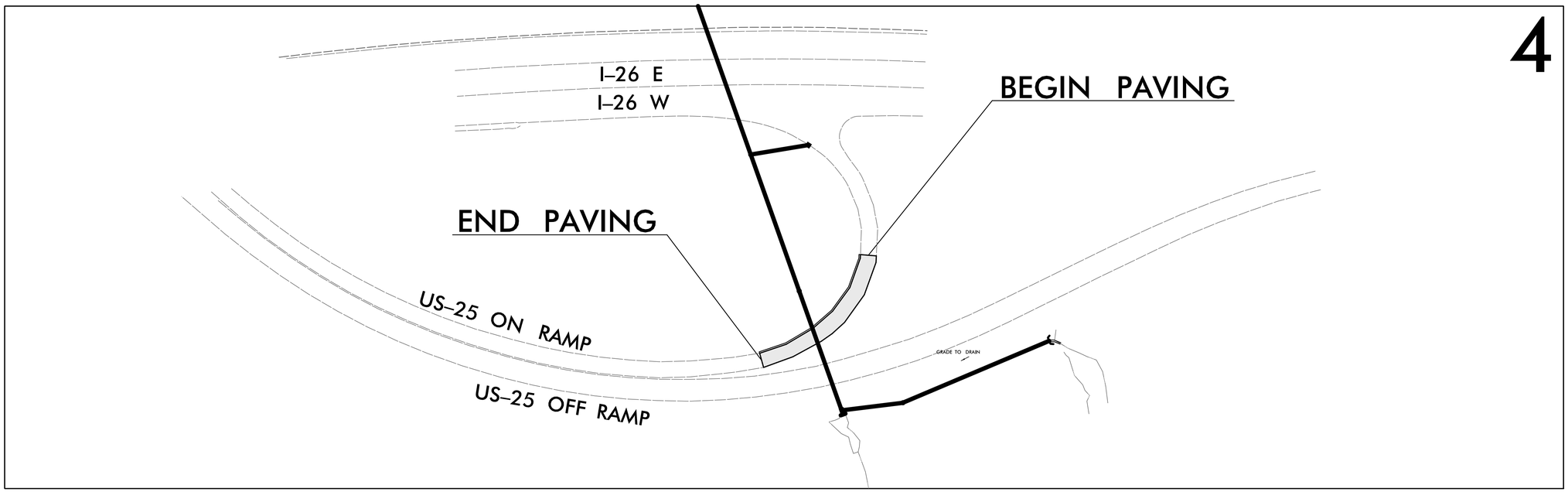


DOCUMENT NOT CONSIDERED FINAL UNLESS ALL SIGNATURES COMPLETED

***GRAPHIC SCALES***

50 25 0 50 100
PLANS

50 25 0 50 100
PROFILE (HORIZONTAL)

10 5 0 10 20
PROFILE (VERTICAL)

***DESIGN DATA***

US 25 ON RAMP

ADT 2020 = 750

FUNC CLASS = RURAL ARTERIAL REGIONAL TIER

***NCDOT CONTACT:*** JEANETTE WHITE, PE

***PLANS PREPARED BY:***

TGS ENGINEERS
201 W. MARION ST
SHELBY, NC 28150
PH (704) 476-0003
CORP. LICENSE NO.: C-0275

***PLANS PREPARED FOR:***

NORTH CAROLINA DEPARTMENT OF TRANSPORATION
DIVISION 14
253 Webster Rd
Sylva, NC 28779

***RIGHT OF WAY DATE:***
N/A

***LETTING DATE:***
APRIL 26, 2022

***2018 STANDARD SPECIFICATIONS***

JIMMY L. TERRY, PE
*PROJECT ENGINEER*

AUSTIN R. TURNER, PE
*PROJECT DESIGN ENGINEER*

NORTH CAROLINA PROFESSIONAL SEAL 16600 ENGINEER RANDALL C. HENEGAR
2/16/2022

***HYDRAULICS ENGINEER***

DocuSigned by: Randy Henegar
B5F228A4319F47D...
***P.E.***
***SIGNATURE:***

NORTH CAROLINA PROFESSIONAL SEAL 048121 ENGINEER AUSTIN R. TURNER
2/16/2022

***ROADWAY DESIGN ENGINEER***

DocuSigned by: Austin Turner
61CE842EB33F47D...
***P.E.***
***SIGNATURE:***

STATE OF NORTH CAROLINA DEPARTMENT OF TRANSPORTATION

2/11/2022
X:\NCDOT\Div 14 US 25 Sinkhole\Roadway\Proj\US 25 Sinkhole_Rdy_tsh.dgn
User:aturner

DocuSign Envelope ID: FDC55FDA-ED29-449B-A558-5D3CD2BA3515

8/17/99

| PROJECT REFERENCE NO. | SHEET NO. |
|---|---|
| 51214.01AM | 1A |

ROADWAY DESIGN ENGINEER

NORTH CAROLINA PROFESSIONAL SEAL ENGINEER AUSTIN R. TURNER

DocuSigned by: 0A4B42

2/16/2022

**DOCUMENT NOT CONSIDERED FINAL UNLESS ALL SIGNATURES COMPLETED**

# INDEX OF SHEETS


| SHEET NUMBER | SHEET |
|---|---|
| 1 | TITLE SHEET |
| 1A | INDEX OF SHEETS, GENERAL NOTES, AND STANDARD DRAWINGS |
| 1B | CONVENTIONAL SYMBOLS |
| 2A-1 | PAVEMENT SCHEDULE AND TYPICAL SECTIONS |
| 2B-1 | ROADWAY DETAILS |
| 2D-1 | DRAINAGE DETAILS |
| 3D-1 THRU 3D-2 | DRAINAGE SUMMARIES |
| 4 | PLAN SHEET |
| TMP-1 THRU TMP-3 | TRAFFIC MANAGEMENT PLANS |
| EC-1 THRU EC-6 | EROSION CONTROL PLANS |


# GENERAL NOTES

GENERAL NOTES: 2018 SPECIFICATIONS

EFFECTIVE: 01–16–2018
REVISED:

GRADE LINE:
GRADING AND SURFACING:

THE GRADE LINES SHOWN DENOTE THE FINISHED ELEVATION OF THE PROPOSED SURFACING AT GRADE POINTS SHOWN ON THE TYPICAL SECTIONS. GRADE LINES MAY BE ADJUSTED AT THEIR BEGINNING AND ENDING AND AT STRUCTURES AS DIRECTED BY THE ENGINEER IN ORDER TO SECURE A PROPER TIE–IN.

CLEARING:

CLEARING ON THIS PROJECT SHALL BE PERFORMED TO THE LIMITS ESTABLISHED BY MODIFIED METHOD II.

SUPERELEVATION:

ALL CURVES ON THIS PROJECT SHALL BE SUPERELEVATED IN ACCORDANCE WITH STD. NO. 225.04 USING THE RATE OF SUPERELEVATION AND RUNOFF SHOWN ON THE PLANS. SUPERELEVATION IS TO BE REVOLVED ABOUT THE GRADE POINTS SHOWN ON THE TYPICAL SECTIONS.

SHOULDER CONSTRUCTION:

ASPHALT, EARTH, AND CONCRETE SHOULDER CONSTRUCTION ON THE HIGH SIDE OF SUPERELEVATED CURVES SHALL BE IN ACCORDANCE WITH STD. NO. 560.01

GUARDRAIL:

THE GUARDRAIL LOCATIONS SHOWN ON THE PLANS MAY BE ADJUSTED DURING CONSTRUCTION AS DIRECTED BY THE ENGINEER. THE CONTRACTOR SHOULD CONSULT WITH THE ENGINEER PRIOR TO ORDERING GUARDRAIL MATERIAL.

TEMPORARY SHORING:

SHORING REQUIRED FOR THE MAINTENANCE OF TRAFFIC WILL BE PAID FOR AS "EXTRA WORK" IN ACCORDANCE WITH SECTION 104–7

# STANDARD DRAWINGS

EFF. 01–16–2018
REV.

2018 ROADWAY ENGLISH STANDARD DRAWINGS

The following Roadway Standards as appear in "Roadway Standard Drawings" Highway Design Branch – N. C. Department of Transportation – Raleigh, N. C., Dated January, 2018 are applicable to this project and by reference hereby are considered a part of these plans:

| STD.NO. | TITLE |
|---|---|
| DIVISION 2 – EARTHWORK | |
| 200.02 | Method of Clearing – Method II |
| 225.01 | Guide for Grading Subgrade – Interstate and Freeway |
| 225.04 | Method of Obtaining Superelevation – Two Lane Pavement |
| DIVISION 3 – PIPE CULVERTS | |
| 300.01 | Method of Pipe Installation |
| DIVISION 5 – SUBGRADE, BASES AND SHOULDERS | |
| 560.01 | Method of Shoulder Construction – High Side of Superelevated Curve – Method I |
| DIVISION 6 – ASPHALT BASES AND PAVEMENTS | |
| 654.01 | Pavement Repairs |
| DIVISION 8 – INCIDENTALS | |
| 838.01 | Concrete Endwall for Single and Double Pipe Culverts – 15" thru 48" Pipe 90 Skew |
| 838.11 | Brick Endwall for Single and Double Pipe Culverts – 15" thru 48" Pipe 90 Skew |
| 840.00 | Concrete Base Pad for Drainage Structures |
| 840.01 | Brick Catch Basin – 12" thru 54" Pipe |
| 840.02 | Concrete Catch Basin – 12" thru 54" Pipe |
| 840.03 | Frame, Grates and Hood – For Use on Standard Catch Basin |
| 840.31 | Concrete Junction Box – 12" thru 66" Pipe |
| 840.32 | Brick Junction Box – 12" thru 66" Pipe |
| 840.51 | Brick Manhole 12" – 12" thru 36" Pipe |
| 840.52 | Precast Manhole – 12" thru 36" Pipe |
| 840.53 | Precast Manhole with Masonry Base – 12" thru 42" Pipe |
| 840.54 | Manhole Frame and Cover |
| 840.66 | Drainage Structure Steps |
| 840.71 | Concrete and Brick Pipe Plug |
| 846.01 | Concrete Curb, Gutter and Curb & Gutter |
| 862.01 | Guardrail Placement |
| 862.02 | Guardrail Installation |

2/11/2022
R:\Hydro\Div 14 US 25 Sinkhole\Roadway\Proj\US 25 Sinkhole_Rdy_tsh.dgn
jlsestumer

DocuSign Envelope ID: FDC55FDA-ED29-449B-A558-5D3CD2BA3515

12/2/2016

| PROJECT REFERENCE NO. | SHEET NO. |
|---|---|
| 51214.01AM | 1-B |

STATE OF NORTH CAROLINA, DIVISION OF HIGHWAYS

# CONVENTIONAL PLAN SHEET SYMBOLS

*Note: Not to Scale*

**S.U.E. = Subsurface Utility Engineering*

## *BOUNDARIES AND PROPERTY:*

- State Line
- County Line
- Township Line
- City Line
- Reservation Line
- Property Line
- Existing Iron Pin — EIP
- Computed Property Corner
- Property Monument — ECM
- Parcel/Sequence Number — 123
- Existing Fence Line
- Proposed Woven Wire Fence
- Proposed Chain Link Fence
- Proposed Barbed Wire Fence
- Existing Wetland Boundary — WLB
- Proposed Wetland Boundary — WLB
- Existing Endangered Animal Boundary — EAB
- Existing Endangered Plant Boundary — EPB
- Existing Historic Property Boundary — HPB
- Known Contamination Area: Soil — S
- Potential Contamination Area: Soil — S
- Known Contamination Area: Water — W
- Potential Contamination Area: Water — W
- Contaminated Site: Known or Potential

## *BUILDINGS AND OTHER CULTURE:*

- Gas Pump Vent or U/G Tank Cap
- Sign — S
- Well — W
- Small Mine
- Foundation
- Area Outline
- Cemetery
- Building
- School
- Church
- Dam

## *HYDROLOGY:*

- Stream or Body of Water
- Hydro, Pool or Reservoir
- Jurisdictional Stream — JS
- Buffer Zone 1 — BZ 1
- Buffer Zone 2 — BZ 2
- Flow Arrow
- Disappearing Stream
- Spring
- Wetland
- Proposed Lateral, Tail, Head Ditch — FLOW
- False Sump

## *RAILROADS:*

- Standard Gauge — CSX TRANSPORTATION
- RR Signal Milepost — MILEPOST 35
- Switch — SWITCH
- RR Abandoned
- RR Dismantled

## *RIGHT OF WAY & PROJECT CONTROL:*

- Secondary Horiz and Vert Control Point
- Primary Horiz Control Point
- Primary Horiz and Vert Control Point
- Exist Permanent Easment Pin and Cap
- New Permanent Easement Pin and Cap
- Vertical Benchmark
- Existing Right of Way Marker
- Existing Right of Way Line
- New Right of Way Line — RW
- New Right of Way Line with Pin and Cap — RW
- New Right of Way Line with Concrete or Granite R/W Marker — RW
- New Control of Access Line with Concrete C/A Marker — CA
- Existing Control of Access — CA
- New Control of Access — CA
- Existing Easement Line — E
- New Temporary Construction Easement — E
- New Temporary Drainage Easement — TDE
- New Permanent Drainage Easement — PDE
- New Permanent Drainage / Utility Easement — DUE
- New Permanent Utility Easement — PUE
- New Temporary Utility Easement — TUE
- New Aerial Utility Easement — AUE

## *ROADS AND RELATED FEATURES:*

- Existing Edge of Pavement
- Existing Curb
- Proposed Slope Stakes Cut — C
- Proposed Slope Stakes Fill — F
- Proposed Curb Ramp — CR
- Existing Metal Guardrail
- Proposed Guardrail
- Existing Cable Guiderail
- Proposed Cable Guiderail
- Equality Symbol
- Pavement Removal

## *VEGETATION:*

- Single Tree
- Single Shrub
- Hedge
- Woods Line
- Orchard
- Vineyard — Vineyard

## *EXISTING STRUCTURES:*

MAJOR:

- Bridge, Tunnel or Box Culvert — CONC
- Bridge Wing Wall, Head Wall and End Wall — CONC WW

MINOR:

- Head and End Wall — CONC HW
- Pipe Culvert
- Footbridge
- Drainage Box: Catch Basin, DI or JB — CB
- Paved Ditch Gutter
- Storm Sewer Manhole — S
- Storm Sewer — S

## *UTILITIES:*

POWER:

- Existing Power Pole
- Proposed Power Pole
- Existing Joint Use Pole
- Proposed Joint Use Pole
- Power Manhole — P
- Power Line Tower
- Power Transformer
- U/G Power Cable Hand Hole — HH
- H-Frame Pole
- U/G Power Line LOS B (S.U.E.*) — P
- U/G Power Line LOS C (S.U.E.*) — P
- U/G Power Line LOS D (S.U.E.*) — P

TELEPHONE:

- Existing Telephone Pole
- Proposed Telephone Pole
- Telephone Manhole — T
- Telephone Pedestal — T
- Telephone Cell Tower
- U/G Telephone Cable Hand Hole — HH
- U/G Telephone Cable LOS B (S.U.E.*) — T
- U/G Telephone Cable LOS C (S.U.E.*) — T
- U/G Telephone Cable LOS D (S.U.E.*) — T
- U/G Telephone Conduit LOS B (S.U.E.*) — TC
- U/G Telephone Conduit LOS C (S.U.E.*) — TC
- U/G Telephone Conduit LOS D (S.U.E.*) — TC
- U/G Fiber Optics Cable LOS B (S.U.E.*) — T FO
- U/G Fiber Optics Cable LOS C (S.U.E.*) — T FO
- U/G Fiber Optics Cable LOS D (S.U.E.*) — T FO

WATER:

- Water Manhole — W
- Water Meter
- Water Valve
- Water Hydrant
- U/G Water Line LOS B (S.U.E*) — W
- U/G Water Line LOS C (S.U.E*) — W
- U/G Water Line LOS D (S.U.E*) — W
- Above Ground Water Line — A/G Water

TV:

- TV Pedestal — C
- TV Tower
- U/G TV Cable Hand Hole — HH
- U/G TV Cable LOS B (S.U.E.*) — TV
- U/G TV Cable LOS C (S.U.E.*) — TV
- U/G TV Cable LOS D (S.U.E.*) — TV
- U/G Fiber Optic Cable LOS B (S.U.E.*) — TV FO
- U/G Fiber Optic Cable LOS C (S.U.E.*) — TV FO
- U/G Fiber Optic Cable LOS D (S.U.E.*) — TV FO

GAS:

- Gas Valve
- Gas Meter
- U/G Gas Line LOS B (S.U.E.*) — G
- U/G Gas Line LOS C (S.U.E.*) — G
- U/G Gas Line LOS D (S.U.E.*) — G
- Above Ground Gas Line — A/G Gas

SANITARY SEWER:

- Sanitary Sewer Manhole
- Sanitary Sewer Cleanout
- U/G Sanitary Sewer Line — SS
- Above Ground Sanitary Sewer — A/G Sanitary Sewer
- SS Forced Main Line LOS B (S.U.E.*) — FSS
- SS Forced Main Line LOS C (S.U.E.*) — FSS
- SS Forced Main Line LOS D (S.U.E.*) — FSS

MISCELLANEOUS:

- Utility Pole
- Utility Pole with Base
- Utility Located Object
- Utility Traffic Signal Box — S
- Utility Unknown U/G Line LOS B (S.U.E.*) — ?UTL
- U/G Tank; Water, Gas, Oil
- Underground Storage Tank, Approx. Loc. — UST
- A/G Tank; Water, Gas, Oil
- Geoenvironmental Boring
- U/G Test Hole LOS A (S.U.E.*)
- Abandoned According to Utility Records — AATUR
- End of Information — E.O.I.

DocuSign Envelope ID: FDC55FDA-ED29-449B-A558-5D3CD2BA3515

6/2/99

# FINAL PAVEMENT SCHEDULE

| | |
|---|---|
| C1 | PROP. APPROX. 1½" ASPHALT CONCRETE SURFACE COURSE, TYPE S9.5C, AT AN AVERAGE RATE OF 168 LBS. PER SQ. YD. IN EACH OF TWO LAYERS. |
| C2 | PROP. APPROX. 3" ASPHALT CONCRETE SURFACE COURSE, TYPE S9.5C, AT AN AVERAGE RATE OF 168 LBS. PER SQ. YD. IN EACH OF TWO LAYERS. |
| D1 | PROP. APPROX. 4" ASPHALT CONCRETE INTERMEDIATE COURSE, TYPE I19.0C, AT AN AVERAGE RATE OF 456 LBS. PER SQ. YD. |
| E1 | PROP. APPROX. 5½" ASPHALT CONCRETE BASE COURSE, TYPE B25.0C, AT AN AVERAGE RATE OF 627 LBS. PER SQ. YD. |
| R1 | 2'-6" CONCRETE CURB & GUTTER. |
| T | EARTH MATERIAL. |
| V | MILLING EXISTING PAVEMENT (0 TO 1½"), THIS SHEET FOR DETAIL |

PAVEMENT EDGE SLOPES ARE 1:1 UNLESS SHOWN OTHERWISE.

| PROJECT REFERENCE NO. | SHEET NO. |
|---|---|
| 51214.01AM | 2A-1 |

ROADWAY DESIGN ENGINEER

PAVEMENT DESIGN ENGINEER

NORTH CAROLINA PROFESSIONAL SEAL 046121 ENGINEER AUSTIN R. TURNER

DocuSigned by: Austin Turner

2/16/2022

**DOCUMENT NOT CONSIDERED FINAL UNLESS ALL SIGNATURES COMPLETED**

TGS ENGINEERS
201 W. MARION ST. STE. 200
SHELBY, NC 28150
PH (704) 476-0003
CORP. LICENSE NO.: C-0275

(I-26 W. OFF RAMP)

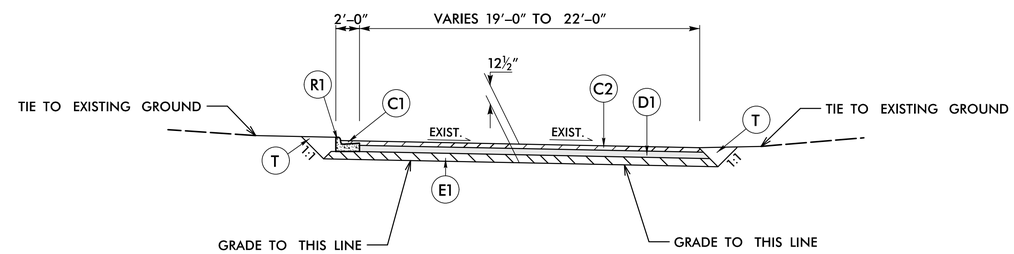


## TYPICAL SECTION NO. 1

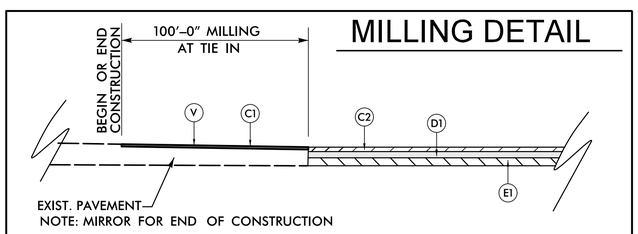


## MILLING DETAIL

USE MILLING DETAIL AS FOLLOWS:

MIN. 100' BEYOND SINKHOLE REPAIR AREA

NOTE:CONTRACTOR SHALL NEATLY SAWCUT PAVEMENT AND FULLY REPLACE PAVEMENT THAT HAS BEEN COMPRIMISED DUE TO THE FAILURE OF THE DRAINAGE STRUCTURE. CONTRACTOR THEN SHALL MILL AND RESURFACE A MINIMUM OF 100 FEET IN EACH DIRECTION IN ORDER TO PROVIDE A SMOOTH TIE IN.

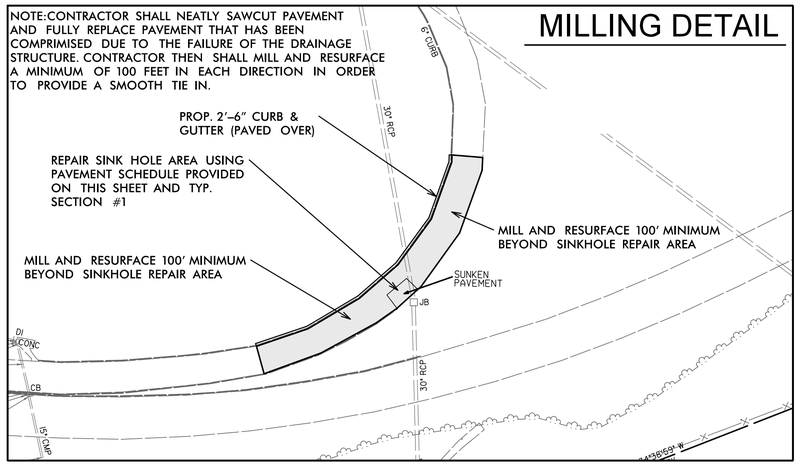


2/16/2022
X:\INK001\Div 14 US 25 Sinkhole\Roadway\Proj\US 25 Sinkhole_Rdy_typ.dgn
User:Burner

DocuSign Envelope ID: FDC55FDA-ED29-449B-A558-5D3CD2BA3515

| PROJECT REFERENCE NO. | SHEET NO. |
|---|---|
| 51214.01AM | 2B-1 |
| DOCUMENT NOT CONSIDERED FINAL UNLESS ALL SIGNATURES COMPLETED | |

STATE OF
NORTH CAROLINA
DEPT. OF TRANSPORTATION
DIVISION OF HIGHWAYS
RALEIGH, N.C.

ROADWAY DETAIL DRAWING FOR
**GUARDRAIL INSTALLATION**

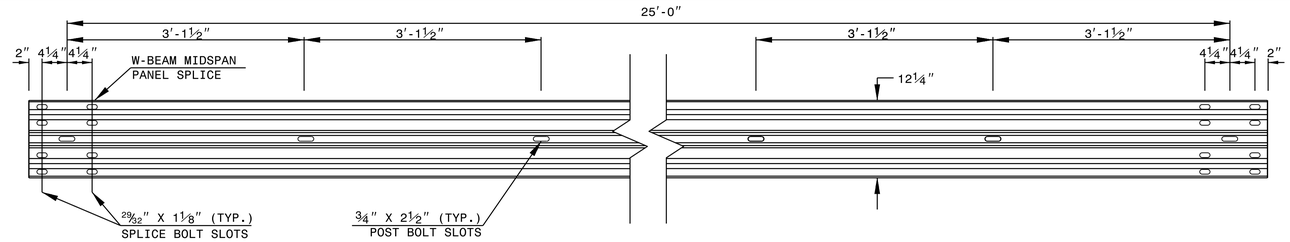


**STANDARD W-BEAM GUARDRAIL**

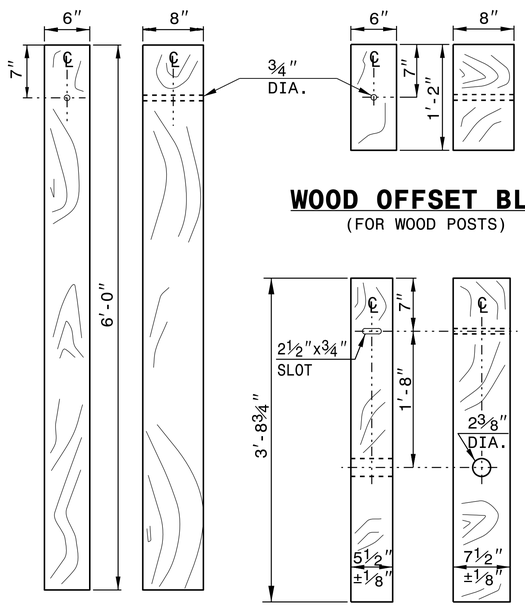


**STANDARD LINE POST**

**WOOD OFFSET BLOCK**
(FOR WOOD POSTS)

**SHORT WOOD BREAKAWAY POST**

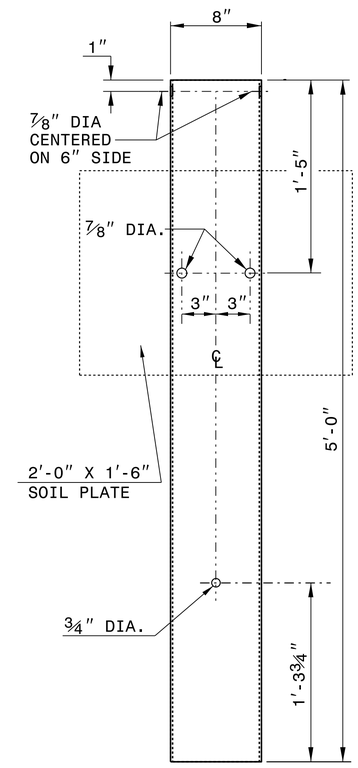


**STEEL TUBE**
TS 6"x8"x0.1875"

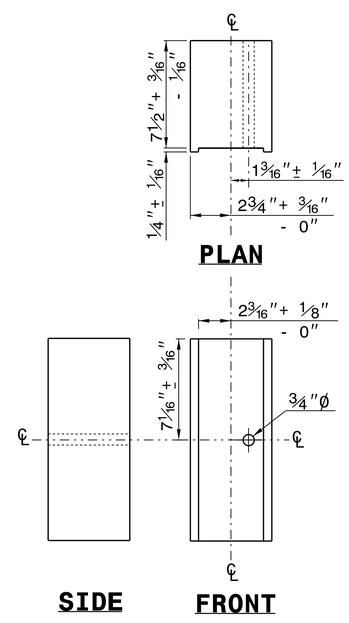


**ROUTED OFFSET BLOCK**

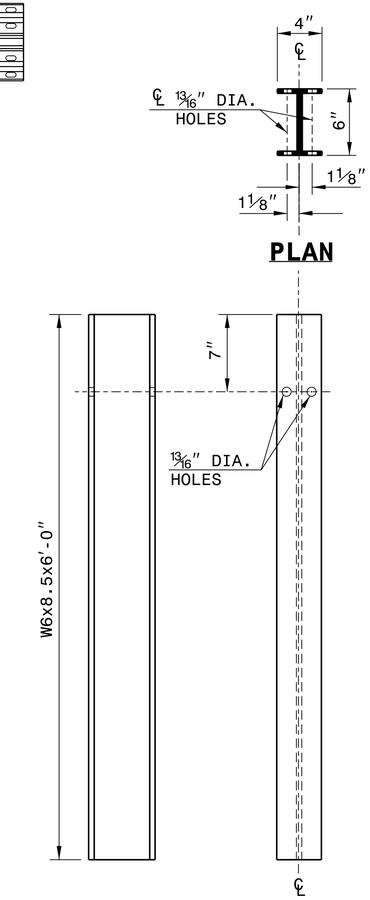


**"W6" STEEL POST**

**SYSTEM PARTS**

SHEET 6 OF 8
**862D02**

STATE OF
NORTH CAROLINA
DEPT. OF TRANSPORTATION
DIVISION OF HIGHWAYS
RALEIGH, N.C.

ROADWAY DETAIL DRAWING FOR
**GUARDRAIL INSTALLATION**

SHEET 6 OF 8
**862D02**

NORTH CAROLINA PROFESSIONAL SEAL ENGINEER
DocuSigned by: Kenneth Davenport
2/16/2022

**CONTRACTS STANDARDS AND DEVELOPMENT UNIT**
Office 919-707-6950 FAX 919-250-4119

**SEE TITLE BLOCK**

ORIGINAL BY: J.HOWERTON DATE: 3-7-2018
MODIFIED BY: DATE:
CHECKED BY: DATE:
FILE SPEC.:

DocuSign Envelope ID: FDC55FDA-ED29-449B-A558-5D3CD2BA3515

| PROJECT REFERENCE NO. | SHEET NO. |
|---|---|
| 51214.01AM | 2D-1 |

STATE OF NORTH CAROLINA
DEPT. OF TRANSPORTATION
DIVISION OF HIGHWAYS
RALEIGH, N.C.

ENGLISH DETAIL DRAWING FOR

# PRECAST MANHOLE 7′, 8′ AND 9′ DIAMETER

SHEET 1 OF 1

**840D52**

GENERAL NOTES

USE 4000 PSI MINIMUM COMPRESSIVE STRENGTH CONCRETE.

DESIGN, FABRICATE AND ASSEMBLE PRECAST MANHOLE COMPONENTS IN ACCORDANCE WITH AASHTO M199.

ASSEMBLE RISER AND GRADE RINGS WITH STEPS SPACED 16″ FROM THE TOP TO THE BOTTOM OF THE MANHOLE.

WHERE THE MANHOLE IS EXPOSED TO ROAD TRAFFIC, THE TOP OF THE MANHOLE IS TO BE FLUSH WITH THE GROUND. AT OTHER LOCATIONS IT SHOULD BE A MINIMUM OF 9″ ABOVE THE GROUND.

DEPTH OF FILL LIMITED TO 30′-0″ FROM FINSH GRADE TO TOP OF BOTTOM SLAB.

THE MIN. SLAB THICKNESS ‘T′ SHALL BE THE DIMENSION OF THE THINNEST PORTION OF THE TOP/BOTTOM SLAB.

* TOP MAT OF REINFORCEMENT MAY BE NEGLECTED IF TOP SLAB HAS A DISTINGUISHABLE TOP AND BOTTOM.

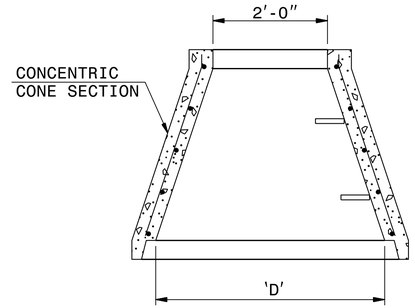


**ALTERNATE CONE SECTION**

| D | W | T | As |
|---|---|---|---|
| INTERNAL DIAMETER (FT.) | MIN. WALL THICKNESS (IN.) | MIN. TOP/BOTTOM SLAB THICKNESS (IN.) | MIN. CIRCUMFERENTIAL AREA OF STEEL PER VERTICAL FT. (SQ. IN.) |
| 7 | 8.0 | 8 | 0.21 |
| 8 | 8.5 | 8 | 0.24 |
| 9 | 9.0 | 9 | 0.27 |

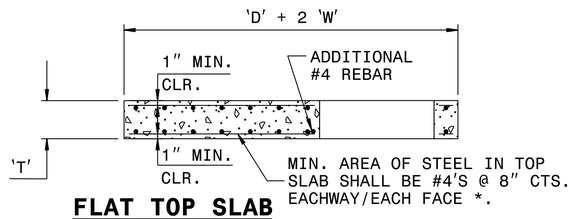


**FLAT TOP SLAB**

| FRAME AND GRATES | STD. NO. |
|---|---|
| TRAFFIC BEARING | 840.37 |
| | |
| NONTRAFFIC BEARING: | 840.16 |
| | 840.20 |
| | 840.22 |
| | 840.24 |
| | 840.29 |

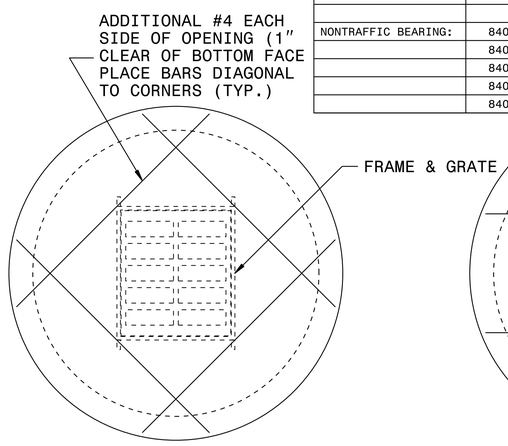


**GRATED INLET OPTION**

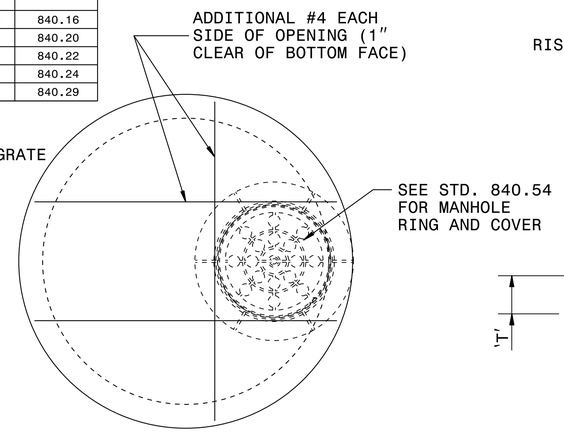


**MANHOLE OPTION**

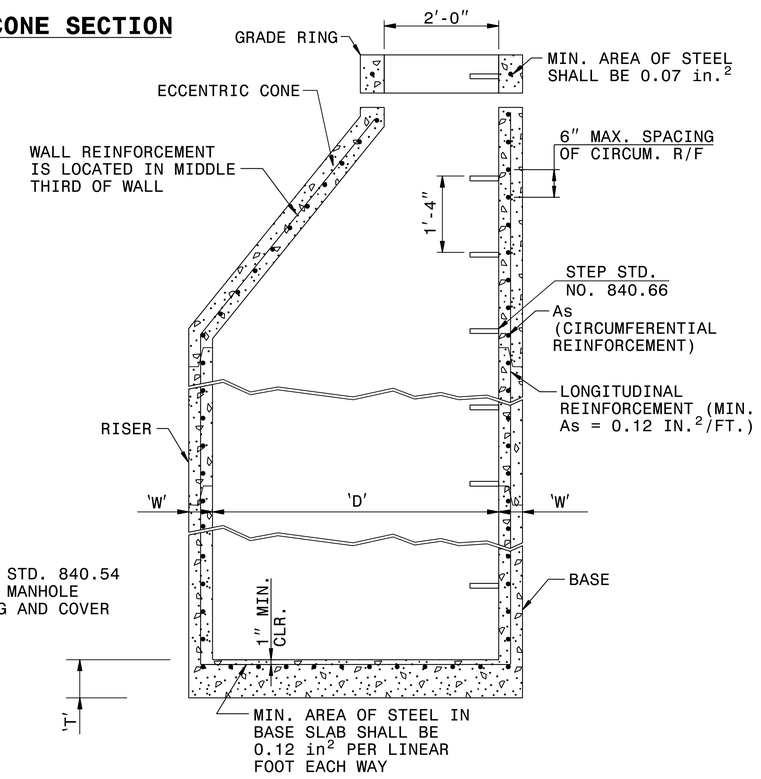


**TYPICAL MANHOLE SECTION**

STATE OF NORTH CAROLINA
DEPT. OF TRANSPORTATION
DIVISION OF HIGHWAYS
RALEIGH, N.C.

ENGLISH DETAIL DRAWING FOR

# PRECAST MANHOLE 7′, 8′ AND 9′ DIAMETER

SHEET OF

**840D52**

DOCUMENT NOT CONSIDERED FINAL UNLESS ALL SIGNATURES COMPLETED

**CONTRACT STANDARDS AND DEVELOPMENT UNIT**
Office 919-707-6950 FAX 919-250-4119

**SEE PLATE FOR TITLE**

ORIGINAL BY: T.S.Spell DATE: 7-17-00
MODIFIED BY: DATE:
CHECKED BY: DATE:
FILE SPEC.: ds174:usr/details/stand/840d52_8&9.dgn

04-MAR-2020 11:11
S:\Contracts\Contracts\Special Details\jhowerton\840d52.8&9.dgn
jhowerton AT CSD-320965

DocuSign Envelope ID: FDC55FDA-ED29-449B-A558-5D3CD2BA3515

TGSLTW1014

| | | | |
|---|---|---|---|
| COMPUTED BY: | REL | DATE: | 2/7/22 |
| CHECKED BY: | BJH | DATE: | 2/7/22 |

# NORTH CAROLINA DEPARTMENT OF TRANSPORTATION
# DIVISION OF HIGHWAYS

| PROJECT NO. | SHEET NO. |
|---|---|
| 51214.01AM | 3D-1 |

**Note: Invert Elevations indicated are for Bid Purposes only and shall not be used for project construction stakeout. See "Standard Specifications For Roads and Structures, Section 300-5".**

## *LIST OF PIPES, ENDWALLS, ETC. (FOR PIPES 48 INCHES & UNDER)*

| LINE & STATION / SIZE / THICKNESS OR GAUGE | OFFSET | STRUCTURE NUMBER FROM | STRUCTURE NUMBER TO | TOP ELEVATION FT. | INVERT ELEVATION FT. | INVERT ELEVATION FT. | MINIMUM REQUIRED SLOPE % | Drainage Pipe (RCP, CSP, CAAP, HDPE, or PVC) 12 | 15 | 18 | 24 | 30 | 36 | 42 | 48 | DO NOT USE RCP | DO NOT USE CSP | DO NOT USE CAAP | DO NOT USE HDPE | DO NOT USE PVC | C. S. PIPE 12 .064 | 15 .064 | 18 .064 | 24 .064 | 30 .079 | 36 .079 | 42 .109 | 48 .109 | R. C. PIPE CLASS IV 12 | 15 | 18 | 24 | 30 | 36 | 42 | 48 | 15" SIDE DRAIN PIPE | 18" SIDE DRAIN PIPE | 24" SIDE DRAIN PIPE | ENDWALLS STD. 838.01 OR STD. 838.11 (UNLESS NOTED OTHERWISE) CY | DRAINAGE STRUCTURE MASONRY CY | QUANTITIES FOR DRAINAGE STRUCTURES (NOTE: TOTAL LIN. FT. FOR PAY QUANTITY SHALL BE A + (1.3 X B)) 0' THRU 5' EACH | A 5' THRU 10' LIN. FT. | B 10' AND ABOVE LIN. FT. | C.B. STD. 840.01 OR STD. 840.02 | FRAME, GRATES, AND HOOD STD. 840.03 GRATE TYPE E | F | G | | CONCRETE TRANSITIONAL SECTION D.I. STD. 852.04 OR STD. 852.06 | C.B. STD. 852.05 | OPEN THROAT C.B. STD. 840.04 OR STD. 840.05 | G.D.I. (W.S. FLAT) FRAME W/ 2 GRATES STD. 840.20 | G.D.I. (W.S. SAG) FRAME W/ GRATE STD. 840.22 | G.D.I. (W.S. SAG) FRAME W/ 2 GRATES STD. 840.22 | G.D.I. (N.S. SAG) FRAME W/ GRATE STD. 840.24 | G.D.I. (N.S. SAG) FRAME W/ 2 GRATES STD. 840.24 | G.D.I. (N.S. FLAT) FRAME W/ GRATE STD. 840.29 | G.D.I. (N.S. FLAT) FRAME W/ 2 GRATES STD. 840.29 | DRIVEWAY D.I. STD. 840.30 | FRAME W/ GRATE FOR DRIVEWAY STD. 840.30 | J.B. STD. 840.31 OR STD. 840.32 | ANGLED VANE GRATES AND FRAMES STD. 840.33 | T.B.J.B. STD. 840.34 | T.B.D.I. STD. 840.35 | T.B.D.I. FOR STEEL GRATES STD. 840.36 | STEEL FRAME WITH TWO GRATES STD. 840.37 | TEMP STEEL PLATE COVER MASONRY DRAINAGE | SPRING BOX STD. 840.41 | | M.H. STD. 840.51 STD. 840.52, OR STD. 840.53 | M.H. FRAME AND COVER STD. 840.54 | | ADJUST C.B. | ADJUST D.I. | | MODIFIED CONC. FLUME | PREFORMED SCOUR HOLE (PER EACH) | ENERGY DISSIPATION BASIN | | FLOWABLE FILL CY | CONCRETE COLLARS CL. "B" STD. 840.72 CY | CONCRETE AND BRICK PIPE PLUG STD. 840.71 CY | PIPE REMOVAL LIN. FT. | REMARKS |
|---|---|---|---

DocuSign Envelope ID: FDC55FDA-ED29-449B-A558-5D3CD2BA3515

TGSLTW1014

| | | | |
|---|---|---|---|
| COMPUTED BY: | REL | DATE: | 2/7/22 |
| CHECKED BY: | BJH | DATE: | 2/7/22 |

# NORTH CAROLINA DEPARTMENT OF TRANSPORTATION
# DIVISION OF HIGHWAYS

| PROJECT NO. | SHEET NO. |
|---|---|
| 51214.01AM | 3D-2 |

**Note: Invert Elevations indicated are for Bid Purposes only and shall not be used for project construction stakeout. See "Standard Specifications For Roads and Structures, Section 300-5".**

## *LIST OF PIPES, ENDWALLS, ETC. (FOR PIPES 54 INCHES & OVER)*

| LINE & STATION / SIZE / THICKNESS OR GAUGE | OFFSET | STRUCTURE NUMBER FROM | STRUCTURE NUMBER TO | TOP ELEVATION FT. | INVERT ELEVATION FT. | INVERT ELEVATION FT. | MINIMUM REQUIRED SLOPE % | Drainage Pipe (RCP, CSP, CAAP, HDPE, or PVC) 54 | 60 | 66 | 72 | 78 | 84 | | DO NOT USE RCP | DO NOT USE CSP | DO NOT USE CAAP | DO NOT USE HDPE | DO NOT USE PVC | C. S. PIPE 54 | 60 | 66 | 72 | 78 | 84 | | R. C. PIPE CLASS IV 54 | 60 | 66 | 72 | 78 | 84 | | 54" WELDED STEEL PIPE 0.75" THICK, GRADE B IN SOIL | 54" WELDED STEEL PIPE 0.75" THICK, GRADE B NOT IN SOIL | REINFORCED ENDWALLS CY | DRAINAGE STRUCTURE MASONRY CY | C.B. STD. 840.01 OR STD. 840.02 | FRAME, GRATES, AND HOOD STD. 840.03 GRATE TYPE E | F | G | CONCRETE TRANSITIONAL SECTION D.I. STD. 852.04 OR STD. 852.06 | C.B. STD. 852.05 | OPEN THROAT C.B. STD. 840.04 OR STD. 840.05 | CONCRETE BRIDGE APPROACH D.I. STD. 840.13 | D.I. STD. 840.14 OR STD. 840.15 | D.I. FRAME AND GRATES STD. 840.16 | G.D.I. TYPE "A" STD. 840.17 OR STD. 840.26 | G.D.I. TYPE "B" STD. 840.18 OR STD. 840.27 | G.D.I. TYPE "D" STD. 840.19 OR STD. 840.28 | G.D.I. (W.S. FLAT) FRAME WITH GRATE STD. 840.20 | G.D.I. (W.S. FLAT) FRAME W/ 2 GRATES STD. 840.20 | G.D.I. (W.S. SAG) FRAME W/ GRATE STD. 840.22 | G.D.I. (W.S. SAG) FRAME W/ 2 GRATES STD. 840.22 | G.D.I. (N.S. SAG) FRAME W/ GRATE STD. 840.24 | G.D.I. (N.S. SAG) FRAME W/ 2 GRATES STD. 840.24 | G.D.I. (N.S. FLAT) FRAME W/ GRATE STD. 840.29 | G.D.I. (N.S. FLAT) FRAME W/ 2 GRATES STD. 840.29 | DRIVEWAY D.I. STD. 840.30 | FRAME W/ GRATE FOR DRIVEWAY STD. 840.30 | J.B. STD. 840.31 OR STD. 840.32 | ANGLED VANE GRATES AND FRAMES STD. 840.33 | T.B.J.B. STD. 840.34 | T.B.D.I. STD. 840.35 | T.B.D.I. FOR STEEL GRATES STD. 840.36 | STEEL FRAME WITH TWO GRATES STD. 840.37 | TEMP STEEL PLATE COVER MASONRY DRAINAGE | SPRING BOX STD. 840.41 | SPECIAL DESIGN MH, SEE DETAIL SHEET 2D-1 | M.H. STD. 840.51, STD. 840.52, OR STD. 840.53 | M.H. FRAME AND COVER STD. 840.54 | ADJUST C.B. | ADJUST D.I. | MODIFIED CONC. FLUME | PREFORMED SCOUR HOLE (PER EACH) | ENERGY DISSIPATION BASIN | FLOWABLE FILL CY | CONCRETE COLLARS CL. "B" STD. 840.72 CY | CONCRETE AND BRICK PIPE PLUG STD. 840.71 CY | PIPE REMOVAL LIN. FT. | REMARKS |
|---|---|---|---

DocuSign Envelope ID: 3897967F-A48A-49AD-9F89-14904F56CA14

| PROJECT REFERENCE NO. | SHEET NO. |
|---|---|
| 51214.01AM | 4 |
| R/W SHEET NO. | |

ROADWAY DESIGN ENGINEER: NORTH CAROLINA PROFESSIONAL SEAL 048124 ENGINEER AUSTIN R. TURNER — 2/25/2022

HYDRAULICS ENGINEER: NORTH CAROLINA PROFESSIONAL SEAL 19600 ENGINEER RANDALL C. HENDRICK — 2/25/2022

**DOCUMENT NOT CONSIDERED FINAL UNLESS ALL SIGNATURES COMPLETED**

TGS ENGINEERS
201 W. MARION ST
SHELBY, NC 28150
PH (704) 476-0003
CORP. LICENSE NO.: C-0275

REVISIONS

8/17/99

NAD 83/2011

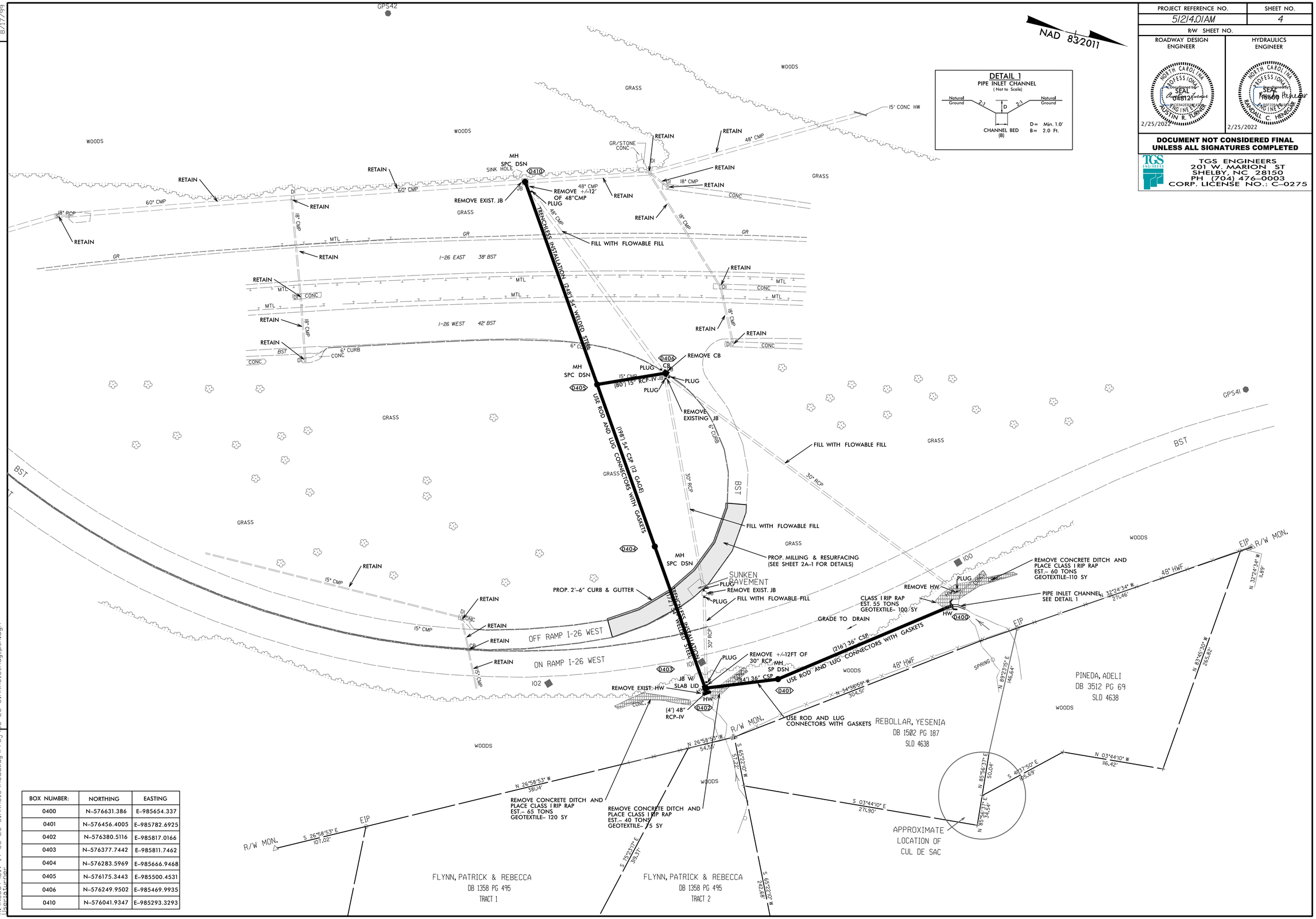


DETAIL 1
PIPE INLET CHANNEL
( Not to Scale)

Natural Ground — 2:1 — D — 2:1 — Natural Ground
CHANNEL BED (B)
D = Min. 1.0'
B = 2.0 Ft.

| BOX NUMBER: | NORTHING | EASTING |
|---|---|---|
| 0400 | N-576631.386 | E-985654.337 |
| 0401 | N-576456.4005 | E-985782.6925 |
| 0402 | N-576380.5116 | E-985817.0166 |
| 0403 | N-576377.7442 | E-985811.7462 |
| 0404 | N-576283.5969 | E-985666.9468 |
| 0405 | N-576175.3443 | E-985500.4531 |
| 0406 | N-576249.9502 | E-985469.9935 |
| 0410 | N-576041.9347 | E-985293.3293 |

2/25/2022
R:\ROADWAY\Proj\14 US 25 Sinkhole\Roadway\Proj\US 25 Sinkhole_Rdy_psh.dgn
User:atrner

DocuSign Envelope ID: FDC55FDA-ED29-449B-A558-5D3CD2BA3515

STATE OF NORTH CAROLINA
DIVISION OF HIGHWAYS

# TRANSPORTATION MANAGEMENT PLAN

# HENDERSON COUNTY

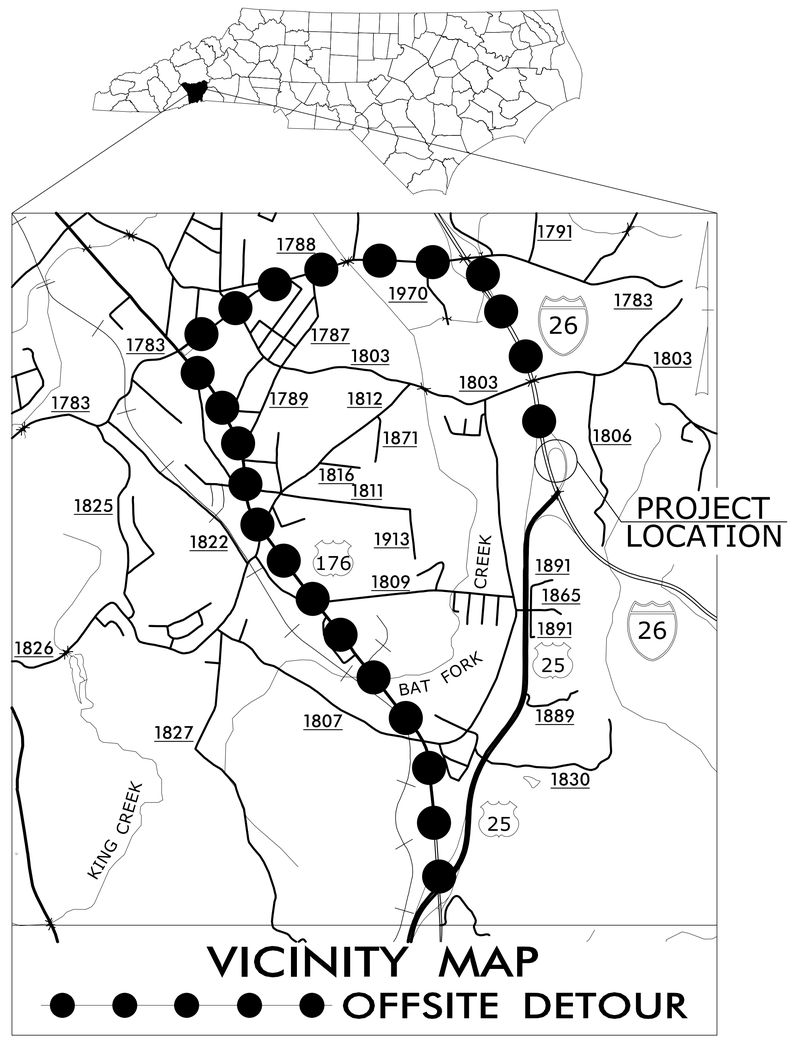


VICINITY MAP

● ● ● ● ● OFFSITE DETOUR

## INDEX OF SHEETS


| SHEET NO. | TITLE |
|---|---|
| TMP-1 | TITLE SHEET, VICINITY MAP, AND INDEX OF SHEETS |
| TMP-1A | LIST OF APPLICABLE ROADWAY STANDARD DRAWINGS, AND LEGEND |
| TMP-1B | TRANSPORTATION OPERATIONS PLAN: (MANAGEMENT STRATEGIES,GENERAL NOTES AND LOCAL NOTES) |
| TMP-2 | OVERVIEW AND PHASING |
| TMP-3 | OFFSITE DETOUR LOCATION AND BARRICADE PLACEMENT |


SHEET NO.
TMP-1

PROJECT: 51214.01AM


*NCDOT CONTACT INFORMATION:*
*Phone: 828 586 2141 Fax: 828 586 4043*
*JEANETTE WHITE, PE*
*Senior Project Engineer*


**DOCUMENT NOT CONSIDERED FINAL UNLESS ALL SIGNATURES COMPLETED**

*WORK ZONE SAFETY & MOBILITY*
*"from the MOUNTAINS to the COAST"*

*PLAN PREPARED FOR N.C.D.O.T. BY:*


TGS ENGINEERS
TGS ENGINEERS
201 W. MARION ST. STE. 200
SHELBY, NC 28150
PH (704) 476-0003
CORP. LICENSE NO.: C-0275

JIMMY TERRY, PE — *PROJECT ENGINEER*
AUSTIN TURNER, PE — *DESIGN ENGINEER*


DIVISION OF HIGHWAYS
STATE OF NORTH CAROLINA
DEPARTMENT OF TRANSPORTATION
WORK ZONE TRAFFIC CONTROL

APPROVED: _____

DATE: _____

NORTH CAROLINA PROFESSIONAL SEAL 048121 ENGINEER AUSTIN R. TURNER
Digitally signed by
2/16/2022

2/16/2022
X:\NCDOT\Div 14 US 25 Sinkhole\Traffic\TrafficControl\TCP\US 25 Sinkhole_TC_TMP_01(TSH).dgn
Useraturner

DocuSign Envelope ID: FDC55FDA-ED29-449B-A558-5D3CD2BA3515

| PROJ. REFERENCE NO. | SHEET NO. |
|---|---|
| 51214.01AM | TMP-1A |

TGS ENGINEERS
201 W. MARION ST. STE. 200
SHELBY, NC 28150
PH (704) 476-0003
CORP. LICENSE NO.: C-0275

# ROADWAY STANDARD DRAWINGS

THE FOLLOWING ROADWAY STANDARDS AS SHOWN IN "ROADWAY STANDARD DRAWINGS" - PROJECT SERVICES UNIT - N.C. DEPARTMENT OF TRANSPORTATION - RALEIGH, N.C., DATED JANUARY 2018 ARE APPLICABLE TO THIS PROJECT AND BY REFERENCE HEREBY ARE CONSIDERED A PART OF THESE PLANS:

| STD. NO. | TITLE |
|---|---|
| 1101.01 | WORK ZONE WARNING SIGNS |
| 1101.02 | TEMPORARY LANE CLOSURES |
| 1101.03 | TEMPORARY ROAD CLOSURES |
| 1101.04 | TEMPORARY SHOULDER CLOSURES |
| 1101.11 | TRAFFIC CONTROL DESIGN TABLES |
| 1110.01 | STATIONARY WORK ZONE SIGNS |
| 1110.02 | PORTABLE WORK ZONE SIGNS |
| 1115.01 | FLASHING ARROW BOARDS |
| 1130.01 | DRUMS |
| 1135.01 | CONES |
| 1145.01 | BARRICADES |
| 1180.01 | SKINNY DRUMS |
| 1205.01 | PAVEMENT MARKINGS - LINE TYPES AND OFFSETS |
| 1205.03 | PAVEMENT MARKINGS - EXIT AND ENTRANCE RAMPS |
| 1261.01 | GUARDRAIL AND BARRIER DELINEATORS - INSTALLATION SPACING |
| 1261.02 | GUARDRAIL AND BARRIER DELINEATORS - TYPES AND MOUNTING |
| 1262.01 | GUARDRAIL END DELINEATION |

# LEGEND

## GENERAL

- DIRECTION OF TRAFFIC FLOW
- DIRECTION OF PEDESTRIAN TRAFFIC FLOW
- EXIST. PVMT.
- NORTH ARROW
- PROPOSED PVMT.
- TEMP. SHORING (LOCATION PURPOSES ONLY)
- WORK AREA
- PAVEMENT REMOVAL

## SIGNALS

- EXISTING
- PROPOSED
- TEMPORARY

## PAVEMENT MARKINGS

- EXISTING LINES
- PROPOSED LINES

## TRAFFIC CONTROL DEVICES

- BARRICADE (TYPE III)
- CONE
- DRUM
- SKINNY DRUM
- TUBULAR MARKER
- TEMPORARY CRASH CUSHION
- FLASHING ARROW BOARD
- FLAGGER
- LAW ENFORCEMENT
- TRUCK MOUNTED ATTENUATOR (TMA)
- CHANGEABLE MESSAGE SIGN

## TEMPORARY SIGNING

- PORTABLE SIGN
- STATIONARY SIGN
- STATIONARY OR PORTABLE SIGN

## PAVEMENT MARKERS

- CRYSTAL/CRYSTAL
- YELLOW/YELLOW

## PAVEMENT MARKING SYMBOLS

- PAVEMENT MARKING SYMBOLS

APPROVED: _____

DATE: _____

NORTH CAROLINA PROFESSIONAL SEAL 048121 ENGINEER AUSTIN R. TURNER

2/16/2022

**DOCUMENT NOT CONSIDERED FINAL UNLESS ALL SIGNATURES COMPLETED**

DIVISION OF HIGHWAYS · STATE OF NORTH CAROLINA · DEPARTMENT OF TRANSPORTATION · WORK ZONE TRAFFIC CONTROL

ROADWAY STANDARD DRAWINGS, LEGEND, & TEMPORARY PAVEMENT MARKING SCHEDULE

2/11/2022
X:\NCDOT\Div 14 US 25 Sinkhole\Traffic\TrafficControl\TCP\US 25 Sinkhole_TC_TMP_01\STA & Legend\.dgn
User:aturner

DocuSign Envelope ID: FDC55FDA-ED29-449B-A558-5D3CD2BA3515

| PROJ. REFERENCE NO. | SHEET NO. |
|---|---|
| 51214.01AM | TMP-1B |

TGS ENGINEERS
201 W. MARION ST. STE. 200
SHELBY, NC 28150
PH (704) 476-0003
CORP. LICENSE NO.: C-0275

# GENERAL NOTES

CHANGES MAY BE REQUIRED WHEN PHYSICAL DIMENSIONS IN THE DETAIL DRAWINGS, STANDARD DETAILS, AND ROADWAY DETAILS ARE NOT ATTAINABLE TO MEET FIELD CONDITIONS OR RESULT IN DUPLICATE OR UNDESIRED OVERLAPPING OF DEVICES. MODIFICATION MAY INCLUDE: MOVING, SUPPLEMENTING, COVERING, OR REMOVAL OF DEVICES AS DIRECTED BY THE ENGINEER.

THE FOLLOWING GENERAL NOTES APPLY AT ALL TIMES FOR THE DURATION OF THE CONSTRUCTION PROJECT EXCEPT WHEN OTHERWISE NOTED IN THE PLAN OR DIRECTED BY THE ENGINEER.

TIME RESTRICTIONS

A) DO NOT CLOSE OR NARROW TRAVEL LANES DURING HOLIDAYS AND SPECIAL EVENTS AS FOLLOWS:
ROAD NAME
ANY ROADS
HOLIDAY

1. FOR ANY UNEXPECTED OCCURRENCE THAT CREATES UNUSUALLY HIGH TRAFFIC VOLUMES, AS DIRECTED BY THE ENGINEER.
2. FOR NEW YEAR'S, BETWEEN THE HOURS OF 4:00 P.M. DECEMBER 31st TO 9:00 A.M. JANUARY 2ND. IF NEW YEAR'S DAY IS ON A FRIDAY, SATURDAY, SUNDAY, OR MONDAY THEN UNTIL 9:00 A.M. THE FOLLOWING TUESDAY.
3. FOR EASTER, BETWEEN THE HOURS OF 4:00 P.M. THURSDAY AND 9:00 A.M. MONDAY.
4. FOR MEMORIAL DAY, BETWEEN THE HOURS OF 4:00 P.M. FRIDAY TO 9:00 A.M. TUESDAY.
5. FOR INDEPENDENCE DAY, BETWEEN THE HOURS OF 4:00 P.M. THE DAY BEFORE INDEPENDENCE DAY AND 9:00 A.M. THE DAY AFTER INDEPENDENCE DAY.
   IF INDEPENDENCE DAY IS ON A FRIDAY, SATURDAY, SUNDAY OR MONDAY THEN BETWEEN THE HOURS OF 4:00 P.M. THE THURSDAY BEFORE INDEPENDENCE DAY AND 9:00 A.M. THE TUESDAY AFTER INDEPENDENCE DAY.
6. FOR LABOR DAY, BETWEEN THE HOURS OF 4:00 P.M. FRIDAY AND 9:00 A.M. TUESDAY.
7. FOR THANKSGIVING DAY, BETWEEN THE HOURS OF 4:00 P.M. TUESDAY TO 9:00 A.M. MONDAY.
8. FOR CHRISTMAS, BETWEEN THE HOURS OF 4:00 P.M. THE FRIDAY BEFORE THE WEEK OF CHRISTMAS DAY AND 9:00 A.M. THE FOLLOWING TUESDAY AFTER THE WEEK OF CHRISTMAS.

LANE AND SHOULDER CLOSURE REQUIREMENTS

B) REMOVE LANE CLOSURE DEVICES FROM THE LANE WHEN WORK IS NOT BEING PERFORMED BEHIND THE LANE CLOSURE OR WHEN A LANE CLOSURE IS NO LONGER NEEDED OR AS DIRECTED BY THE ENGINEER.

C) WHEN PERSONNEL AND/OR EQUIPMENT ARE WORKING WITHIN 15 FT OF AN OPEN TRAVEL LANE, CLOSE THE NEAREST OPEN SHOULDER USING ROADWAY STANDARD DRAWING NO. 1101.04 UNLESS THE WORK AREA IS PROTECTED BY BARRIER OR GUARDRAIL OR A LANE CLOSURE IS INSTALLED.

D) WHEN PERSONNEL AND/OR EQUIPMENT ARE WORKING ON THE SHOULDER ADJACENT TO AN UNDIVIDED FACILITY AND WITHIN 5 FT OF AN OPEN TRAVEL LANE, CLOSE THE NEAREST OPEN TRAVEL LANE USING ROADWAY STANDARD DRAWING NO. 1101.02 UNLESS THE WORK AREA IS PROTECTED BY BARRIER OR GUARDRAIL.

WHEN PERSONNEL AND/OR EQUIPMENT ARE WORKING ON THE SHOULDER ADJACENT TO A DIVIDED FACILITY AND WITHIN 10 FT OF AN OPEN TRAVEL LANE, CLOSE THE NEAREST OPEN TRAVEL LANE USING ROADWAY STANDARD DRAWING NO. 1101.02 UNLESS THE WORK AREA IS PROTECTED BY BARRIER OR GUARDRAIL.

E) WHEN PERSONNEL AND/OR EQUIPMENT ARE WORKING WITHIN A LANE OF TRAVEL OF AN UNDIVIDED OR DIVIDED FACILITY, CLOSE THE LANE ACCORDING TO THE TRAFFIC CONTROL PLANS, ROADWAY STANDARD DRAWINGS, OR AS DIRECTED BY THE ENGINEER. CONDUCT THE WORK SO THAT ALL PERSONNEL AND/OR EQUIPMENT REMAIN WITHIN THE CLOSED TRAVEL LANE.

F) DO NOT WORK SIMULTANEOUSLY WITHIN 15 FT ON BOTH SIDES OF AN OPEN TRAVELWAY, RAMP, OR LOOP WITHIN THE SAME LOCATION UNLESS PROTECTED WITH GUARDRAIL OR BARRIER

G) PROVIDE TRAFFIC CONTROL FOR APPROPRIATE LANE CLOSURES FOR SURVEYING DONE BY THE DEPARTMENT

TRAFFIC PATTERN ALTERATIONS

H) NOTIFY THE ENGINEER THIRTY (30) CALENDAR DAYS PRIOR TO ANY TRAFFIC PATTERN ALTERATION.

SIGNING

I) INSTALL ADVANCE WORK ZONE WARNING SIGNS WHEN WORK IS WITHIN 40 FT FROM THE EDGE OF TRAVEL LANE AND NO MORE THAN THREE (3) DAYS PRIOR TO THE BEGINNING OF CONSTRUCTION.

J) ENSURE ALL NECESSARY SIGNING IS IN PLACE PRIOR TO ALTERING ANY TRAFFIC PATTERN.

TRAFFIC CONTROL DEVICES

K) WHEN LANE CLOSURES ARE NOT IN EFFECT SPACE CHANNELIZING DEVICES IN WORK AREAS NO GREATER IN FEET THAN TWICE THE POSTED SPEED LIMIT (MPH) EXCEPT, 10 FT ON-CENTER IN RADII, AND 3 FT OFF THE EDGE OF AN OPEN TRAVELWAY. REFER TO STANDARD SPECIFICATIONS FOR ROADS AND STRUCTURES SECTIONS 1130 (DRUMS), 1135 (CONES) AND 1180 (SKINNY DRUMS) FOR ADDITIONAL REQUIREMENTS.

PAVEMENT MARKINGS

L) INSTALL PAVEMENT MARKINGS ON THE FINAL SURFACE.

M) TIE PROPOSED PAVEMENT MARKING LINES TO EXISTING PAVEMENT MARKING LINES.

N) REMOVE/REPLACE ANY CONFLICTING/DAMAGED PAVEMENT MARKINGS AND MARKERS BY THE END OF EACH DAY'S OPERATION.

O) NO LANE CLOSURES ON I-26 WILL BE ALLOWED.

# MANAGEMENT STRATEGIES

DURING CONSTRUCTION, US 25 ON RAMP WILL BE CLOSED TO THROUGH TRAFFIC.
US 25 ON RAMP TRAFFIC WILL BE MAINTAINED ON THE FOLLOWING DETOUR:
FROM SR 1783 (UPWARD RD.) TO US 176 TO US 25.

APPROVED: _____

DATE: _____

NORTH CAROLINA PROFESSIONAL SEAL 048121 ENGINEER JUSTIN R. TURNER

2/16/2022

**DOCUMENT NOT CONSIDERED FINAL UNLESS ALL SIGNATURES COMPLETED**

DIVISION OF HIGHWAYS · STATE OF NORTH CAROLINA · DEPARTMENT OF TRANSPORTATION · WORK ZONE TRAFFIC CONTROL

TRANSPORTATION OPERATIONS PLAN

2/11/2022
X:\NCDOT\Div 14 US 25 Sinkhole\Traffic\TrafficControl\TCP\US 25 Sinkhole_TC_TMP_01B(TOP).dgn
Userjaturner

DocuSign Envelope ID: EE52C149-18F3-4A2A-BD54-FE704336B673

| PROJ. REFERENCE NO. | SHEET NO. |
|---|---|
| 51214.01AM | TMP-2 |

TGS ENGINEERS
201 W. MARION ST. STE. 200
SHELBY, NC 28150
PH (704) 476-0003
CORP. LICENSE NO.: C-0275

## PHASING NOTES

STEP 1: INSTALL ALL ADVANCE WARNING SIGNS USING NCDOT ROADWAY STD. DRAWING 1101.01 (SHEET 1 OF 3) AND AS SHOWN ON SHEET TMP-3.

STEP 2: INSTALL TEMPORARY GUARDRAIL USING RSD 1101.04.

STEP 3: INSTALL THE FOLLOWING STRUCTURES AND CONNECTING PIPES (0410, 0405, 0404, 0403, 0402, 0401 AND 0400)

STEP 4: INSTALL DETOUR ROUTE SIGNS AND TYPE III BARRICADES AND SIGNS, AND CLOSE US 25 ON RAMP TO TRAFFIC AS SHOWN IN ROADWAY STANDARD DRAWING 1101.03 (SHEET 2 OF 9) AND TMP-2 AND TMP-3.

PLACE TRAFFIC ON DETOUR.

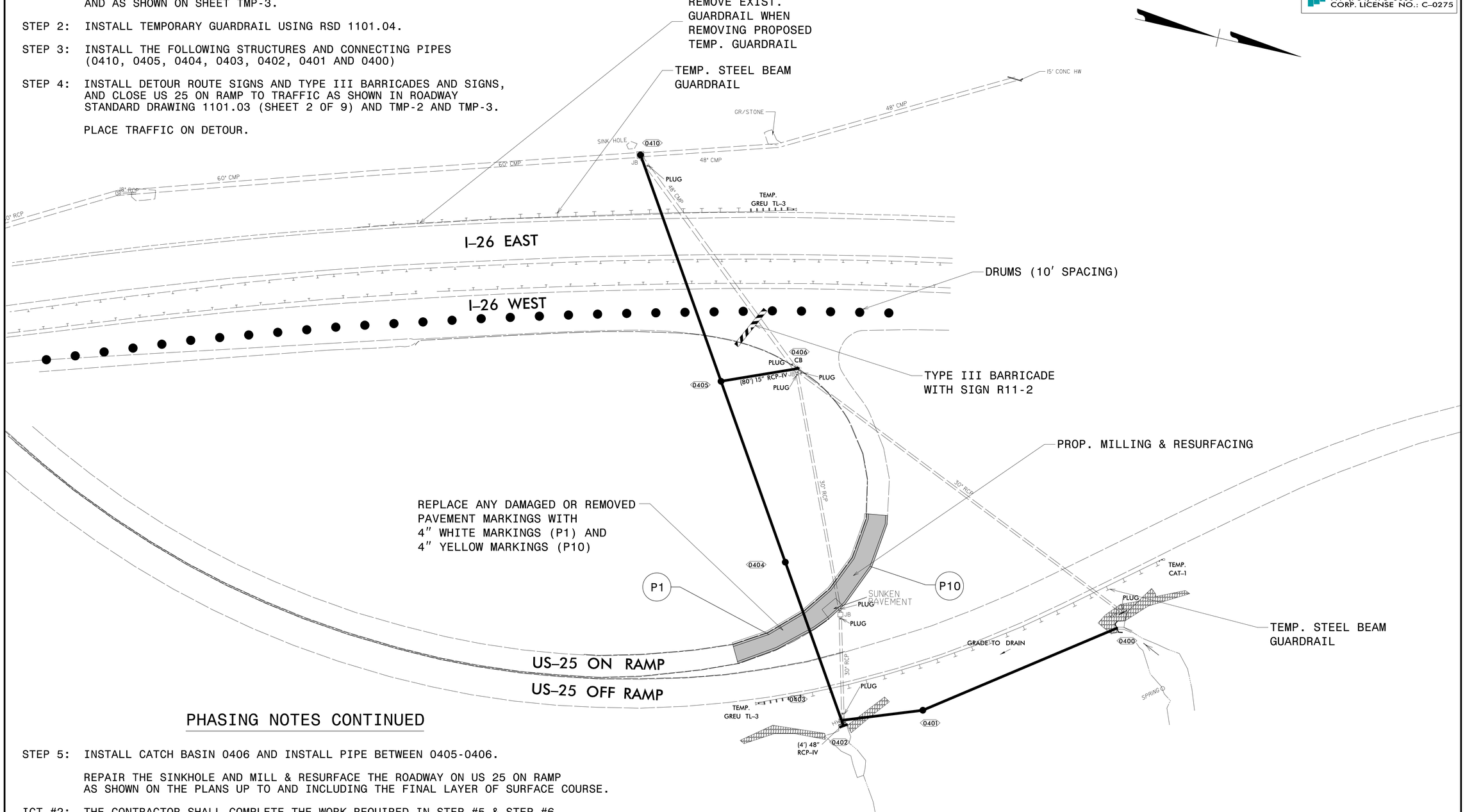


## PHASING NOTES CONTINUED

STEP 5: INSTALL CATCH BASIN 0406 AND INSTALL PIPE BETWEEN 0405-0406.

REPAIR THE SINKHOLE AND MILL & RESURFACE THE ROADWAY ON US 25 ON RAMP AS SHOWN ON THE PLANS UP TO AND INCLUDING THE FINAL LAYER OF SURFACE COURSE.

ICT #2: THE CONTRACTOR SHALL COMPLETE THE WORK REQUIRED IN STEP #5 & STEP #6. THE TIME OF AVAILABILITY FOR THIS INTERMEDIATE CONTRACT TIME IS THE TIME THE CONTRACTOR CLOSES THE RAMP, AS COORDINATED WITH AND APPROVED BY THE ENGINEER. THE COMPLETION TIME FOR THIS INTERMEDIATE CONTRACT TIME IS THE TIME IN WHICH TWENTY (20) CALENDAR DAYS AFTER THE INITIAL CLOSURE OF THE RAMP BY THE CONTRACTOR.

STEP 6: REMOVE BARRICADES, SIGNS, AND ALL OTHER TRAFFIC CONTROL DEVICES AND OPEN

US 25 ON RAMP TO TRAFFIC IN FINAL PATTERN.

STEP 7: REMOVE TEMPORARY GUARDRAIL AND ALL OTHER TRAFFIC CONTROL DEVICES.

APPROVED: _____

DATE: _____

NORTH CAROLINA PROFESSIONAL SEAL 048121 ENGINEER AUSTIN R. TURNER
DocuSigned by: ACE842EB33F1B...
3/23/2022

DOCUMENT NOT CONSIDERED FINAL UNLESS ALL SIGNATURES COMPLETED

DIVISION OF HIGHWAYS · STATE OF NORTH CAROLINA · DEPARTMENT OF TRANSPORTATION · WORK ZONE TRAFFIC CONTROL

# OVERVIEW AND PHASING

3/23/2022
X:\NCDOT\Div 14 US 25 Sinkhole\Traffic\TrafficControl\TCP\US 25 Sinkhole_TC_TMP_02(PHASING).dgn
Userarturner

DocuSign Envelope ID: FDC55FDA-ED29-449B-A558-5D3CD2BA3515

| PROJ. REFERENCE NO. | SHEET NO. |
|---|---|
| 51214.01AM | TMP-3 |

TGS ENGINEERS
201 W. MARION ST. STE. 200
SHELBY, NC 28150
PH (704) 476-0003
CORP. LICENSE NO.: C-0275

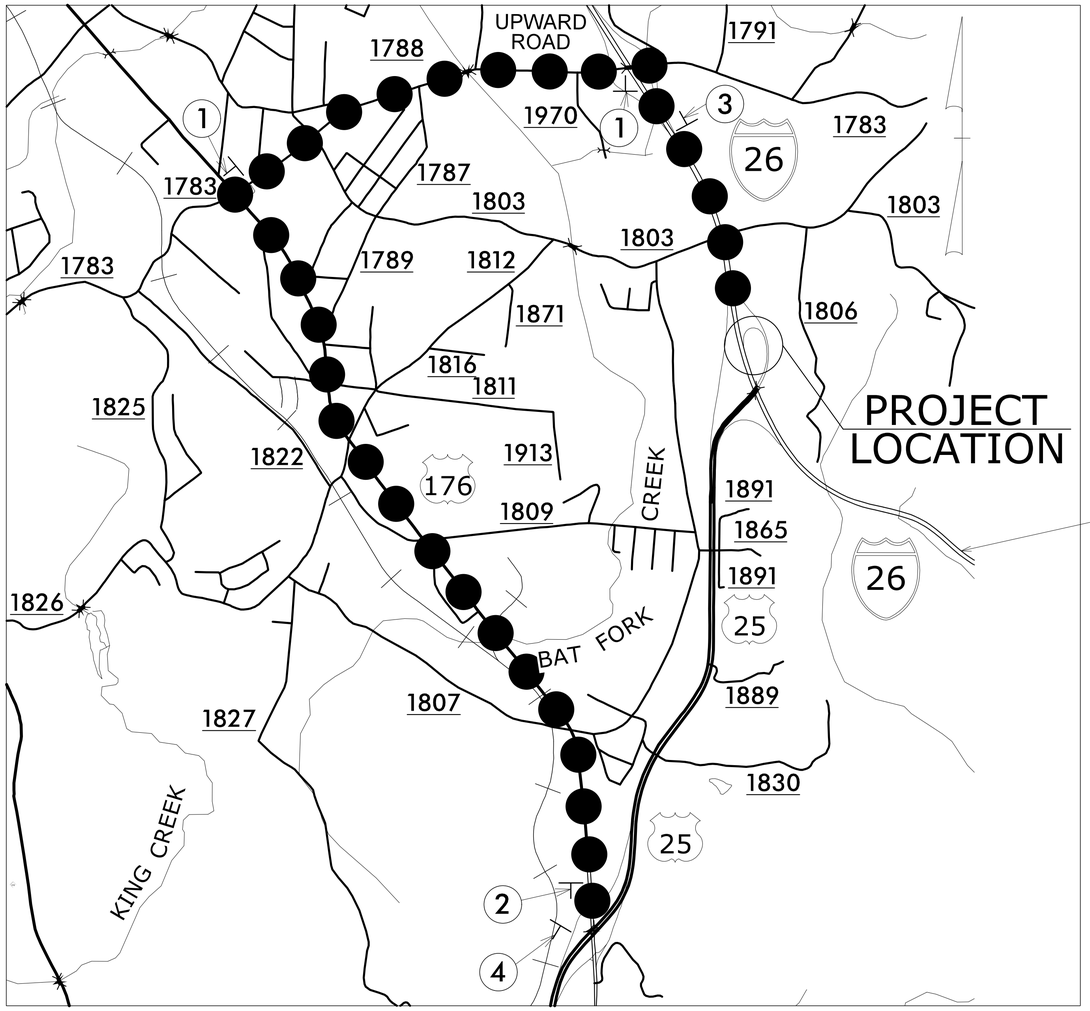


DETOUR ROUTE

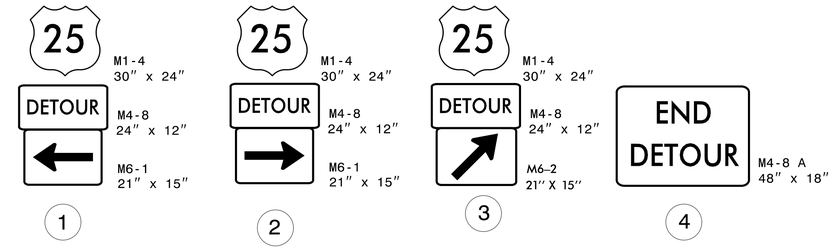


PLACE CHANGEABLE MESSAGE BOARD IN ACCORDANCE WITH NCDOT STD. DRAWING 1101.02, SHT. 4 OF 14

| MESSAGE #1 | MESSAGE #2 |
|---|---|
| US 25 ON RAMP CLOSED | USE EXIT 53 UPWARD RD. FOR DETOUR |

APPROVED: _____

DATE: _____

NORTH CAROLINA PROFESSIONAL SEAL 048121 ENGINEER AUSTIN R. TURNER

2/16/2022

**DOCUMENT NOT CONSIDERED FINAL UNLESS ALL SIGNATURES COMPLETED**

DIVISION OF HIGHWAYS · STATE OF NORTH CAROLINA · DEPARTMENT OF TRANSPORTATION · WORK ZONE TRAFFIC CONTROL

# OFFSITE DETOUR ROUTE AND BARRICADE PLACEMENT

2/11/2022
X:\NCDOT\Div 14 US 25 Sinkhole\Traffic\TrafficControl\TCP\US 25 Sinkhole_TC_TMP_03(DETOUR).dgn
User:aturner

DocuSign Envelope ID: FDC55FDA-ED29-449B-A558-5D3CD2BA3515

# PROJECT: 51214.01AM

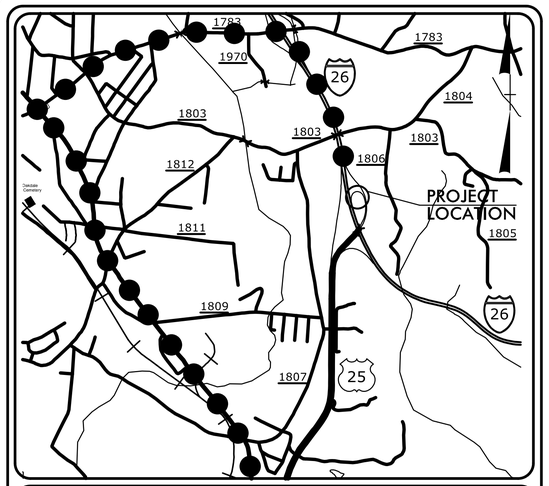


**VICINITY MAP**
NOT TO SCALE

# STATE OF NORTH CAROLINA
## DIVISION OF HIGHWAYS

## PLAN FOR PROPOSED
# HIGHWAY EROSION CONTROL

# HENDERSON COUNTY

***LOCATION: I–26 WEST OFF RAMP DRAINAGE REPAIR AT EXIT 54 FOR US 25 SOUTH***

***TYPE OF WORK: GRADING, DRAINAGE, AND PAVING***

NAD 83/2011

| STATE | STATE PROJECT REFERENCE NO. | SHEET NO. | TOTAL SHEETS |
|---|---|---|---|
| N.C. | 51214.01AM | EC-1 | |

| STATE PROJ. NO. | F. A. PROJ. NO. | DESCRIPTION |
|---|---|---|
| 51214.01AM | N/A | PE |
| 51214.01AM | N/A | R/W & UTIL. |
| 51214.01AM | N/A | CONST. |
| | | |
| | | |

## EROSION AND SEDIMENT CONTROL MEASURES

| Std. # | Description | Symbol |
|---|---|---|
| 1630.03 | Temporary Silt Ditch | TSD |
| 1630.05 | Temporary Diversion | TD |
| 1605.01 | Temporary Silt Fence | |
| 1606.01 | Special Sediment Control Fence | |
| 1622.01 | Temporary Berms and Slope Drains | |
| 1630.02 | Silt Basin Type B | |
| 1633.01 | Temporary Rock Silt Check Type-A | |
| | Temporary Rock Silt Check Type-A with Matting and Polyacrylamide (PAM) | |
| 1633.02 | Temporary Rock Silt Check Type-B | |
| | Wattle / Coir Fiber Wattle | SW CFW |
| | Wattle / Coir Fiber Wattle with Polyacrylamide (PAM) | |
| 1634.01 | Temporary Rock Sediment Dam Type-A | |
| 1634.02 | Temporary Rock Sediment Dam Type-B | |
| 1635.01 | Rock Pipe Inlet Sediment Trap Type-A | |
| 1635.02 | Rock Pipe Inlet Sediment Trap Type-B | |
| 1630.04 | Stilling Basin | |
| 1630.06 | Special Stilling Basin | |
| | Rock Inlet Sediment Trap: | |
| 1632.01 | Type A | A |
| 1632.02 | Type B | B |
| 1632.03 | Type C | C |
| | Skimmer Basin | |
| | Tiered Skimmer Basin | |
| | Infiltration Basin | |

THIS PROJECT CONTAINS EROSION CONTROL PLANS FOR CLEARING AND GRUBBING PHASE OF CONSTRUCTION.

THIS PROJECT HAS BEEN DESIGNED TO SENSITIVE WATERSHED STANDARDS.

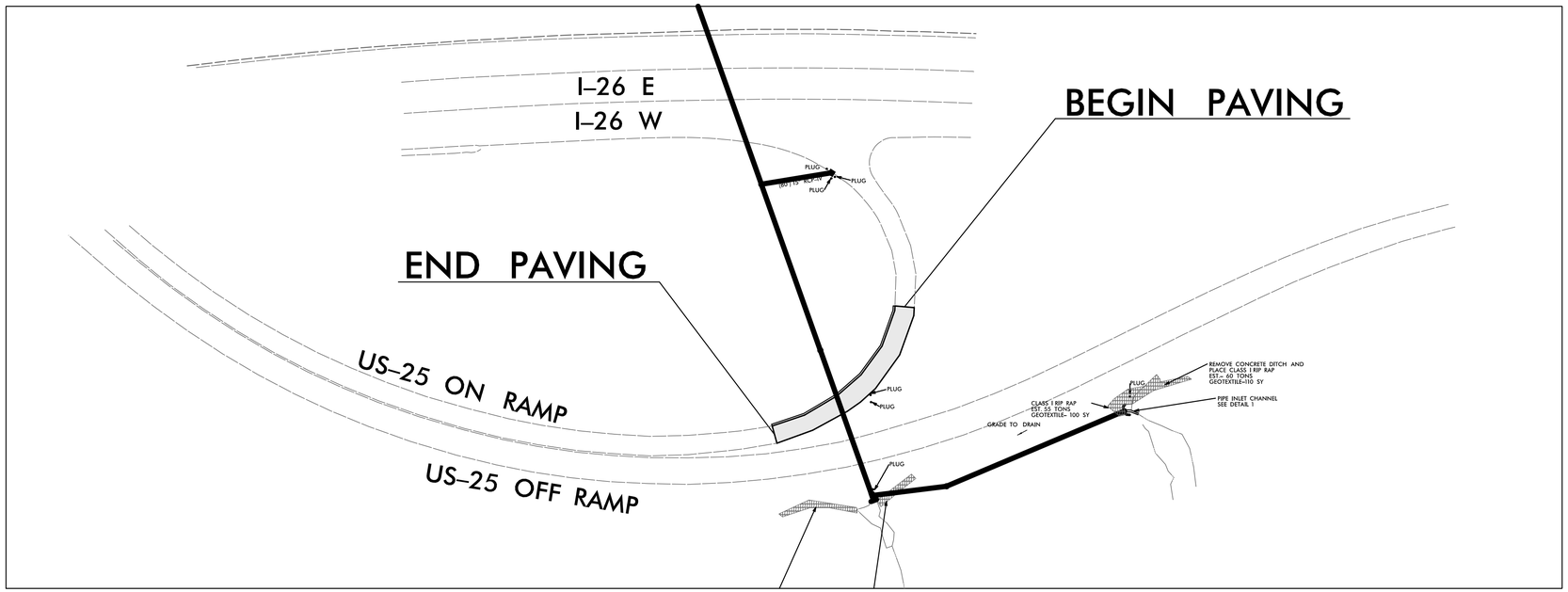


***GRAPHIC SCALE***

50 25 0 50 100
PLANS

***THESE EROSION AND SEDIMENT CONTROL PLANS COMPLY WITH THE APPLICABLE REGULATIONS SET FORTH BY THE NCG–010000 GENERAL CONSTRUCTION PERMIT EFFECTIVE APRIL 1, 2019 AND ISSUED BY THE NORTH CAROLINA DEPARTMENT OF ENVIRONMENTAL QUALITY DIVISION OF WATER RESOURCES.***

TGS ENGINEERS

*Prepared In the Office of:*

***TGS ENGINEERS***
*201 W. MARION ST–STE 200*
*SHELBY, NC 28150*

*Designed by:*

***Austin R. Turner, PE*** — ***4084***
*NAME* — *LEVEL III CERTIFICATION NO.*

Roadway Standard Drawings

The following roadway english standards as appear in "Roadway Standard Drawings"– Roadway Design Unit – N. C. Department of Transportation – Raleigh, N. C., dated January 2018 and the latest revison thereto are applicable to this project and by reference hereby are considered a part of these plans.

| | | | |
|---|---|---|---|
| 1604.01 | Railroad Erosion Control Detail | 1632.01 | Rock Inlet Sediment Trap Type A |
| 1605.01 | Temporary Silt Fence | 1632.02 | Rock Inlet Sediment Trap Type B |
| 1606.01 | Special Sediment Control Fence | 1632.03 | Rock Inlet Sediment Trap Type C |
| 1607.01 | Gravel Construction Entrance | 1633.01 | Temporary Rock Silt Check Type A |
| 1622.01 | Temporary Berms and Slope Drains | 1633.02 | Temporary Rock Silt Check Type B |
| 1630.01 | Riser Basin | 1634.01 | Temporary Rock Sediment Dam Type A |
| 1630.02 | Silt Basin Type B | 1634.02 | Temporary Rock Sediment Dam Type B |
| 1630.03 | Temporary Silt Ditch | 1635.01 | Rock Pipe Inlet Sediment Trap Type A |
| 1630.04 | Stilling Basin | 1635.02 | Rock Pipe Inlet Sediment Trap Type B |
| 1630.05 | Temporary Diversion | 1640.01 | Coir Fiber Baffle |
| 1630.06 | Special Stilling Basin | 1645.01 | Temporary Stream Crossing |
| 1631.01 | Matting Installation | | |

2/11/2022
US 25 Sinkhole\Drainage\Erosion Control\US 25 Sinkhole_EC.dgn_TSH.dgn
Transportation

DocuSign Envelope ID: FDC55FDA-ED29-449B-A558-5D3CD2BA3515

| PROJECT REFERENCE NO. | SHEET NO. |
|---|---|
| 51214.01AM | EC-2 |
| R/W SHEET NO. | |
| ROADWAY DESIGN ENGINEER | HYDRAULICS ENGINEER |

# TEMPORARY ROCK SILT CHECK TYPE 'A' WITH EXCELSIOR MATTING AND POLYACRYLAMIDE (PAM)

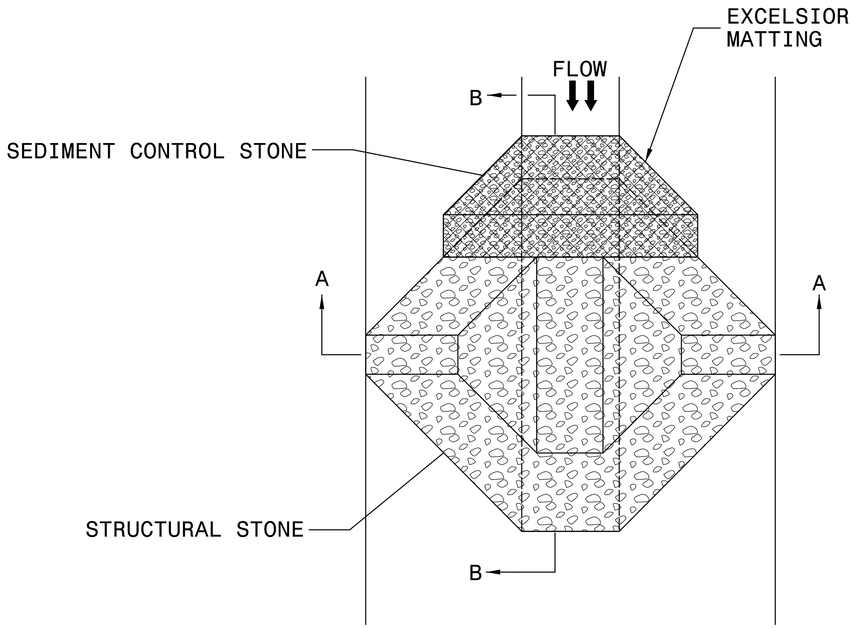


PLAN

NOTES:

INSTALL TEMPORARY ROCK SILT CHECK TYPE A IN ACCORDANCE WITH ROADWAY STANDARD DRAWING NO. 1633.01.

USE EXCELSIOR FOR MATTING MATERIAL AND ANCHOR MATTING SECTION AT TOP AND BOTTOM WITH CLASS B STONE.

PRIOR TO POLYACRYLAMIDE (PAM) APPLICATION, OBTAIN A SOIL SAMPLE FROM PROJECT LOCATION, AND FROM OFFSITE MATERIAL, AND ANALYZE FOR APPROPRIATE PAM FLOCCULANT TO BE APPLIED TO EACH ROCK SILT CHECK.

INITIALLY APPLY 4 OUNCES OF POLYACRYLAMIDE (PAM) TO TOP OF MATTING SECTION AND AFTER EVERY RAINFALL EVENT THAT EQUALS OR EXCEEDS 0.50 INCHES.

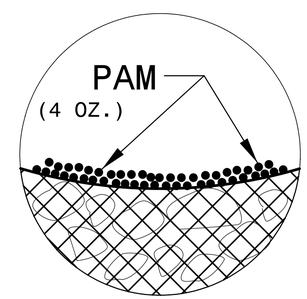


INSET A

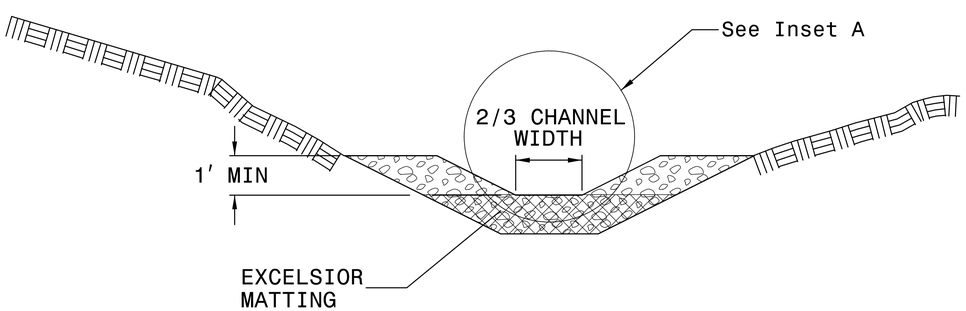


SECTION A-A

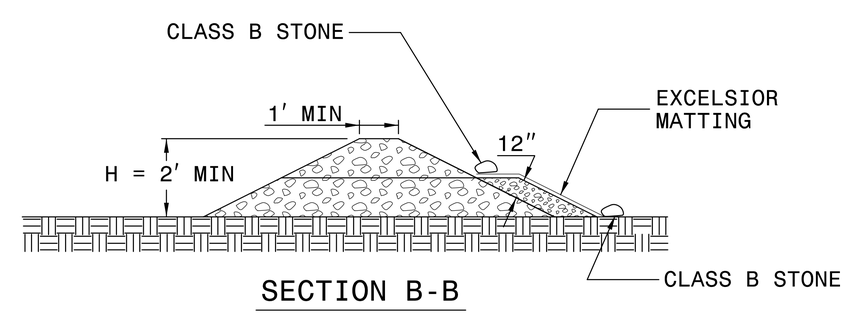


SECTION B-B

NOT TO SCALE

DocuSign Envelope ID: FDC55FDA-ED29-449B-A558-5D3CD2BA3515

| PROJECT REFERENCE NO. | SHEET NO. |
|---|---|
| 51214.01AM | EC-3 |
| ROADWAY DESIGN ENGINEER | HYDRAULICS ENGINEER |

DIVISION OF HIGHWAYS
STATE OF NORTH CAROLINA

# SOIL STABILIZATION TIMEFRAMES

| SITE DESCRIPTION | STABILIZATION TIME | TIMEFRAME EXCEPTIONS |
|---|---|---|
| PERIMETER DIKES, SWALES, DITCHES AND SLOPES | 7 DAYS | NONE |
| HIGH QUALITY WATER (HQW) ZONES | 7 DAYS | NONE |
| SLOPES STEEPER THAN 3:1 | 7 DAYS | IF SLOPES ARE 10' OR LESS IN LENGTH AND ARE NOT STEEPER THAN 2:1, 14 DAYS ARE ALLOWED. |
| SLOPES 3:1 OR FLATTER | 14 DAYS | 7 DAYS FOR SLOPES GREATER THAN 50' IN LENGTH. |
| ALL OTHER AREAS WITH SLOPES FLATTER THAN 4:1 | 14 DAYS | NONE, EXCEPT FOR PERIMETERS AND HQW ZONES. |

DocuSign Envelope ID: 3897967F-A48A-49AD-9F89-14904F56CA14

8/17/99

REVISIONS

| PROJECT REFERENCE NO. | SHEET NO. |
|---|---|
| 51214.01AM | EC-4 |
| R/W SHEET NO. | |
| ROADWAY DESIGN ENGINEER | HYDRAULICS ENGINEER |

TGS ENGINEERS
201 W. MARION ST
SHELBY, NC 28150
PH (704) 476-0003
CORP. LICENSE NO.: C-0275

CLEARING AND GRUBBING AND FINAL EROSION CONTROL FOR CONSTRUCTION SHEET 4

UTILIZE FABRIC INSERT PROTECTION DEVICES IN LIEU OF TEMPORARY ROCK SEDIMENT TRAPS TYPE-C WHERE PONDING MAY OCCUR ON ROADWAY OPEN TO TRAFFIC

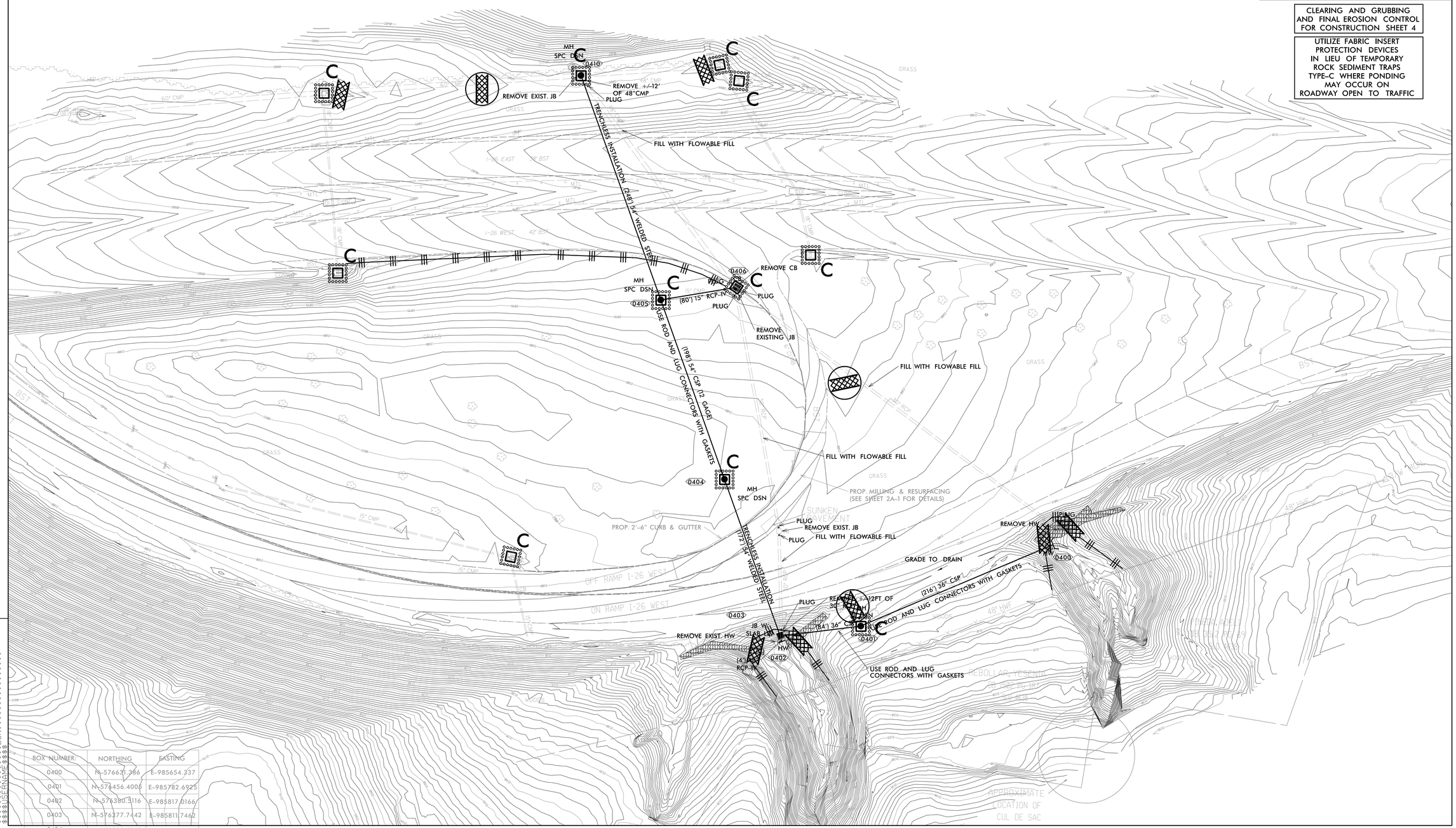


| BOX NUMBER: | NORTHING | EASTING |
|---|---|---|
| 0400 | N-576621.386 | E-985654.337 |
| 0401 | N-576456.4006 | E-985782.6925 |
| 0402 | N-576380.3116 | E-985817.0166 |
| 0403 | N-576377.7442 | E-985811.7462 |
| 0404 | N-576283.5969 | E-985666.9468 |
| 0405 | N-576175.3443 | E-985500.4531 |

SYSTEM ENGINEERING

DocuSign Envelope ID: 3897967F-A48A-49AD-9F89-14904F56CA14

8/17/99

NOTE:SEE EC-6 FOR PIPE PHASING NOTES

# PIPE PHASING

| PROJECT REFERENCE NO. | SHEET NO. |
|---|---|
| 51214.01AM | EC-5 |
| R/W SHEET NO. | |
| ROADWAY DESIGN ENGINEER | HYDRAULICS ENGINEER |

TGS ENGINEERS
201 W. MARION ST
SHELBY, NC 28150
PH (704) 476-0003
CORP. LICENSE NO.: C-0275

NAD 83/2011

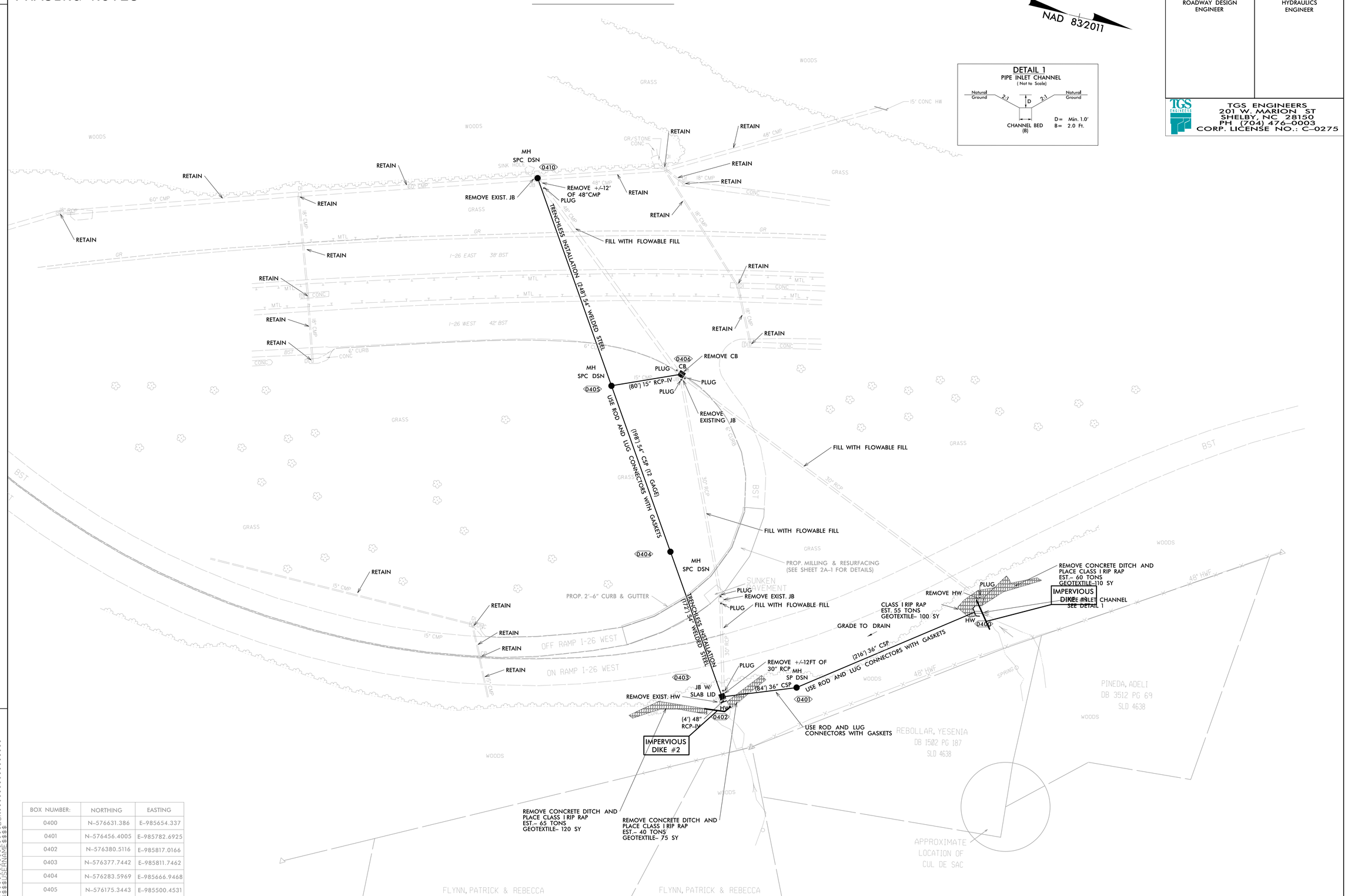


| BOX NUMBER: | NORTHING | EASTING |
|---|---|---|
| 0400 | N-576631.386 | E-985654.337 |
| 0401 | N-576456.4005 | E-985782.6925 |
| 0402 | N-576380.5116 | E-985817.0166 |
| 0403 | N-576377.7442 | E-985811.7462 |
| 0404 | N-576283.5969 | E-985666.9468 |
| 0405 | N-576175.3443 | E-985500.4531 |
| 0406 | N-576249.9302 | E-985469.9935 |
| 0410 | N-576041.9347 | E-985293.3293 |

REVISIONS

SYSTEM: $$$$$$$$$$
LENGTH: $$$$$$$$$$
DATE: $$$$$$$$$$

DocuSign Envelope ID: FDC55FDA-ED29-449B-A558-5D3CD2BA3515

# EXAMPLE OF PUMP–AROUND OPERATION AND PROJECT PHASING NOTES

| PROJECT REFERENCE NO. | SHEET NO. |
|---|---|
| 51214.01AM | EC-6 |
| R/W SHEET NO. | |
| ROADWAY DESIGN ENGINEER | HYDRAULICS ENGINEER |

PROJECT PHASING NOTES:

1. Install Impervious Dike #1, directing flow through existing 30”RCP.
2. Install Junction Box #0401 and 36”Pipe with headwall from #0400 to #0401 via open cut installation.
3. Install Impervious Dike #2 and begin pump around operation through existing 30”RCP.
4. De-water work site as needed into special stilling basin(s)
5. Install 36”Pipe from #0401 to #0403. Install Junction Box #0403 with Headwall and 48”RCP Extension.
6. Install 54”Welded Steel Pipe via trenchless installation from #0403 to #0404. Install Junction Box #0404.
7. Install 54”Welded Steel Pipe from #0405 to #0410 via trenchless installation.
8. Install junction box #0405 and 54”Pipe from #0404 to #0405 via open cut installation.
9. Install Junction Box #0410, removing existing 48”CMP and pumping around as necessary.
10. Remove Impervious Dikes #1 and #2, directing flow through new pipe system. Stop pump around operation.
11. Close I-26 off-ramp to traffic. (See Sheet TMP-2)
12. Remove existing catch basin and plug and fill existing drainage pipes with flowable fill as shown.
13. Install catch basin #0406 and 15”Pipe from #0405 to #0406.
14. Open I-26 off-ramp to traffic.

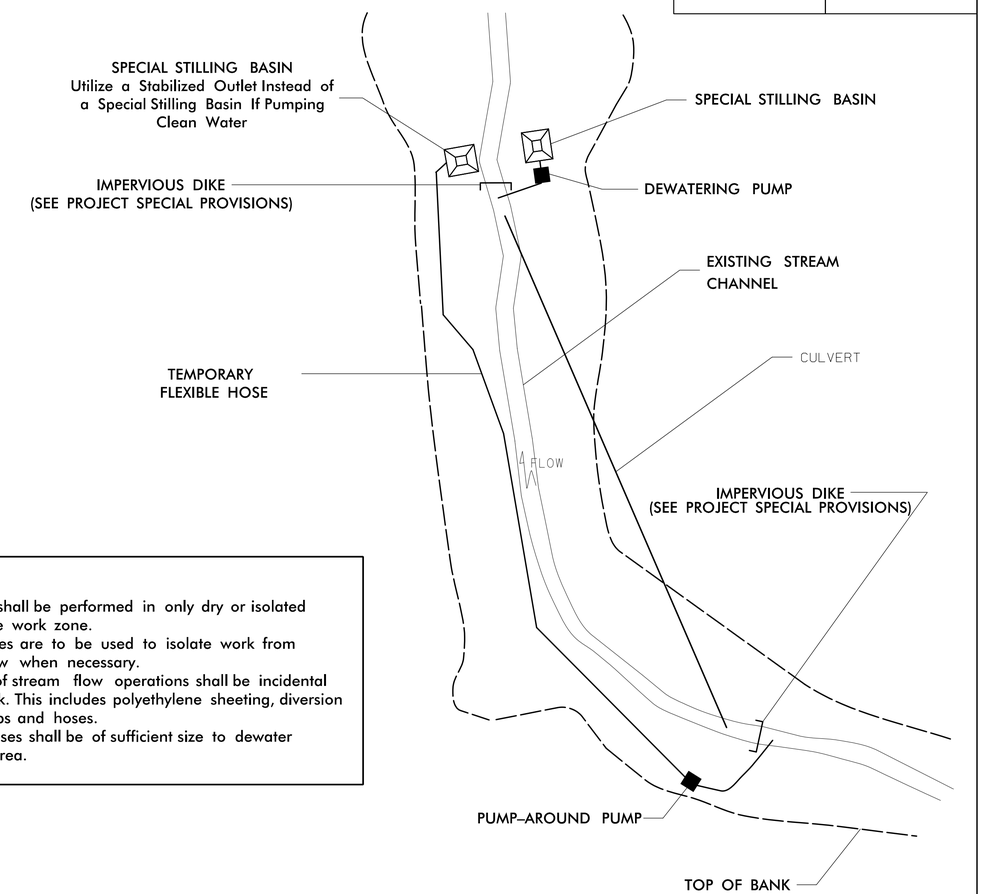


NOTES:
1) All excavation shall be performed in only dry or isolated areas of the work zone.
2) Impervious dikes are to be used to isolate work from stream flow when necessary.
3) Maintenance of stream flow operations shall be incidental to the work. This includes polyethylene sheeting, diversion pipes, pumps and hoses.
4) Pumps and hoses shall be of sufficient size to dewater the work area.

SEQUENCE OF CONSTRUCTION FOR TYPICAL WORK AREA

1. INSTALL SPECIAL STILLING BASIN(S).
2. INSTALL UPSTREAM PUMP AND TEMPORARY FLEXIBLE HOSE.
3. PLACE UPSTREAM IMPERVIOUS DIKE AND BEGIN PUMPING OPERATIONS FOR STREAM DIVERSION.
4. PLACE DOWNSTREAM IMPERVIOUS DIKE AND PUMPING APPARATUS. DEWATER ENTRAPPED AREA. AREA TO BE DEWATERED SHALL BE EQUAL TO ONE DAY’S WORK.
5. INSTALL CULVERT(S) IN ACCORDANCE WITH THE PLANS.
6. EXCAVATE ANY ACCUMULATED SILT AND DEWATER BEFORE REMOVAL OF IMPERVIOUS DIKES. REMOVE IMPERVIOUS DIKES, PUMPS, AND TEMPORARY FLEXIBLE HOSE. (DOWNSTREAM IMPERVIOUS DIKES FIRST).
7. REMOVE SPECIAL STILLING BASIN(S) AND BACKFILL. STABILIZE DISTURBED AREA WITH SEED AND MULCH.